APPENDIX B: UNIFORM CONSTRUCTION STANDARDS

Section

B.1 General Provisions B-2

B.2 Testing and Inspections – General B-5

B.3 Earthwork and Sitework B-8

B.4 Streets B-13

B.5 Water and Sewer B-19

B.6 Stormwater Management B-36

B.7 Street Trees B-41

B.8 Diagrams B-43

APPENDIX B: UNIFORM CONSTRUCTION STANDARDS

Appendix B.1 General Provisions

B.1.1 Application of the Standard

The Construction Specifications in this manual generally refer to work located in the street right-of-way, utility easements and/or storm drainage easements. It is not the intent of the manual to specify how general construction on private property shall be performed.

B.1.2 General Arrangement of Plans

Water, sewer, grading, streets, and drainage plans are generally preferred on one consolidated plan. However, if information is cluttered, separate plans may be prepared if the other information is provided in a light line weight.

In general, all plans shall show:

- Scale(s)
- Date of issue
- Purpose of issue (i.e. for review only, for construction only, etc.)
- North arrow
- USGS elevations and benchmark(s)
- Existing streets, underground utilities (including lines, valves, manholes, etc.), structures, power poles, rights-of-way, easements, etc., labeled with an identification and size, i.e. "existing 8" water line", "Elm Road (SR 0001), 60' ROW, 30' pavement", "Duke Power R/W, 100"'
- Creeks and drainage ways
- Flood plain
- Lot lines
- Vicinity map
- Preparer's seal

The nature and date of all revisions must be included on all revised pages.

B.1.3 Permits, Approvals and Encroachments

The Town shall review all plans prior to submittal to any other reviewing agency except for erosion control plans.

All approvals by all regulating authorities shall be obtained before any construction is started. The Town shall incur no costs for plan approvals. Copies of all approvals, including all permits, maps, plans, and executed agreements shall be received by the Town before construction begins.

Application for approval of water and sewer facilities by NC State Authorities shall be completed in the name of the Town, and be submitted for signatures accompanied by all required documentation, plans and fees.

Other approvals must be obtained from (but not limited to) NC Department of Environment and Natural Resources (sedimentation and erosion control), NC Department of Transportation (right-of-way encroachment), railroads and utilities (right-of-way encroachment), and private property owners (right-of-way). All permanent rights-of-way shall be obtained in the name of the owner/developer and transferred to the Town or in the Town's name initially.

The Town shall incur no expense for permitting or right-of-way procurement.

B.1.4 Approval by the Town

Approval by the Town shall be obtained by the following procedure:

1. Submit three (3) sets of plans with a letter requesting approval of the plans. One (1) set of reproducible plans shall be submitted upon final approval, if required.
2. The Town shall review the plans for conformance with the Town's ordinances and standards and make appropriate comments. The Town shall return plans with comments or stamp the reproducible plans upon final approval.
3. All approvals, easements and rights-of-way shall be obtained in accordance with the Permits, Approvals, and Encroachments portion of this section.
4. The Utilities Director or Town Engineer shall allow construction to begin when all permits have been received and all requirements of the Town have been met.

B.1.5 Construction Records and Inspections

As-Built Drawings. As-built drawings shall be prepared to reflect all changes made during construction. A field survey to locate all roads, structures, and new manholes, and to determine the inverts of new storm and sanitary sewer lines as well as location of all water lines, hydrants, bends and connection points shall be conducted by the owner/developer.

All elevations shall be tied to USGS bench marks and a permanent easily accessible bench mark shall be established at the site and noted on the plans.

As-built drawings shall show locations of all sewer laterals and water services referenced to fixed points so as to be easily located in the event that the markers are destroyed. As-built drawings shall show the location of all drainage easements and utility rights-of-way. Drainage discharges shall be referenced to fixed points so as to be easily located. The method of location of these items shall be as directed by the Utilities Director or Town Engineer.

Inspection. Construction inspection shall be as described in this Ordinance. Care shall be taken to notify the proper authority in sufficient time to inspect and/or witness all phases of construction and testing as required. The owner/developer shall see that adequate inspection is provided at the job site to ensure all installation is done in accordance with the approved plans and these standards and specifications and to allow certification(s) as required.

Construction inspection by a registered professional engineer or a representative of the Engineer's office, under the Engineer's supervision, is required. The Engineer must submit a statement acceptable to State Agencies, reflecting that the water and/or sewer system was constructed in accordance with the approved plans and specifications. The Engineer must also submit a statement certifying the streets and storm drainage have been constructed in substantial conformance with Town Specifications and the approved plans.

Test Results. Tests of all type shall routinely be prepared at no cost to the Town. The Town shall receive copies of all tests which do not meet standard specifications. The Contractor shall be responsible for reviewing and retaining all test reports.

Prior to acceptance of the completed job, the Contractor shall submit a notarized statement certifying that all test reports were acceptable and/or all unacceptable materials have been replaced.

B.1.6 Guarantee of the Work

The work shall be guaranteed by the owner/developer for a period of one year from acceptance by the Town. The guarantee shall cover all materials and workmanship. Any defective work or materials shall be repaired or replaced at no expense to the Town.

B.1.7 Acceptance of Facilities by the Town

The Town shall accept new facilities upon completion of the following:

- All construction is complete, all tests are satisfactory, a final inspection has been held, and all punch list items have been addressed.
- Plan originals with "as-built" revisions are received.
- Engineer's certifications of water, sewer, drainage, and streets are received, and necessary certifications are accepted by the State.
- Contractor's certification of tests has been received.
- The Owner/Developer's statement of one-year guarantee has been received.
- All permanent easements, rights-of-way, and permits are properly recorded and filed.
- Any releases required by the Utilities Director or Town Engineer have been made.

B.1.8 Variance Procedure

Requests for variances from the Standard Town requirements shall be reviewed on a case by case manner as follows:

1. The party requesting the variance shall discuss the issue with the appropriate Town Staff members. Staff will determine if additional engineering studies, special agreements and/or additional documentation is needed to support the variance request. Staff will also determine which of the following variance procedures shall apply.

2. If the variance relates to an issue such as development density, street classification, location of intersections, access, or other items which are easily demonstrated before engineering plans are developed, the requesting party shall submit the variance request in conjunction with the preliminary plat review. Staff will forward the variance request and a staff recommendation to the Planning Board for consideration. The variance shall be clearly identified on the preliminary plat and, if approved by the Planning Board, shall be considered an acceptable concept.

3 If the variance relates to an issue which becomes apparent only after engineering plans have been developed, the requesting party shall submit the variance request in conjunction with the engineering plan review. Staff will forward the request and a staff recommendation to Town Board for consideration. Engineering plans will not be approved until all variance requests have been approved by the Board or the design meets standard Town requirements.

B.1.9 Erosion and Sedimentation Control

All work shall be done in accordance with and subject to the limitations of State rules and regulations for erosion and sediment control.

It shall be the responsibility of the owner/developer to obtain approval of a sedimentation and erosion control plan from the NC Department of Environment and Natural Resources. Additional information as to required format and plan content is available from The NCDENR's Mooresville office.

Appendix B.2 Testing and Inspections – General

B.2.1 Testing - General

Testing shall be of the type and frequency described in each section and summarized in Item 1 of this section. In addition to specifically required tests, the Town Engineer or Utilities Director may require all and as many tests as deemed necessary to ensure that the materials and workmanship meet the requirements of the standards and specifications.

All tests shall be scheduled in accordance with the schedule listed in these specifications and the appropriate party informed so if desired, representative may be sent to watch the test.

All means and apparatus necessary to complete the tests including pumps, gauges, meters, plugs, caps, blocking materials and water shall be provided at no expense to the Town.

The Town shall incur no costs for tests, including additional testing required by the Town Engineer to ensure the quality of questionable work or materials.

The cost of any work necessary to bring work failing any test into conformance and retesting shall be done with no cost to the Town.

B.2.2 Test Results

The Contractor/Owner is responsible for obtaining all required tests, reviewing the results and ensuring that all work not in conformance is corrected or replaced. The Town Engineer shall be copied on all test results which do not meet the Standard Specifications. The Contractor/Owner shall keep records and results of all tests, including tests on failed work which has been corrected through the warranty period. At the end of the job, prior to acceptance by the Town, the Contractor shall submit a notarized statement certifying that he has reviewed the test results and that all test results were acceptable and/or he has corrected any deficiencies. This certification shall be made by an officer or principal of the company, and shall be in the following form:

> I, (name) (title) of (company) certify that on (name of job) testing has been done in accordance with the specifications and standards of the Town of Troutman's Unified Development Ordnance and that I have reviewed those test results and repaired, corrected, or replaced any work not passing the required test.

B.2.3 Water and Sewer Inspections/Certifications

At no expense to the Town, a North Carolina registered engineer, or his representative, shall be employed to inspect the installation of water, sewer, drainage, and streets. Inspection should be of the amount and degree

required for the engineer to complete the job certification(s) required by the Town of Troutman and State agencies.

B.2.4 Drainage and Flushing of Mains

Water lines shall be drained through hydrants or blow-offs to natural drains. Sanitary sewers shall be drained to the downstream system approved by the Utilities Director. Storm drains shall be drained to the discharge. Drainage of lines will be accomplished in such a manner as to minimize erosion and siltation to adjoining properties. Water velocity from drainage and/or blow-off will also be dissipated in an acceptable manner to protect the environment. Chlorinated water shall be handled as described in the sterilization section.

Hydrants or blowoffs shall not be connected to any sewer, submerged in any streams, or installed in any other manner that will permit back siphonage into the distribution system.

B.2.5 Water Use

Water used for testing, flushing, disinfection, etc., may be purchased from the Town at prevailing rates. The use of water (time and quantity) shall be coordinated with the Utilities Director. This coordination shall be accomplished by submittal of a proposed schedule of water use for approval by the Utilities Director. The proposed schedule should be submitted ten (10) working days prior to any water use. Sources other than Town water may be used if approved by the Utilities Director.

B.2.6 Concrete Testing-General

When required, quality control and testing of concrete and constituent materials shall be carried out in accordance with specifications of NCDOT. The Owner/Developer shall make necessary arrangements and pay for all expenses in connection with these tests.

The Owner/Developer or their Contractor, shall be responsible for scheduling the testing firm's personnel to be on site as required for concrete testing.

B.2.7 Supplier Tests

Concrete shall be obtained from a reputable supplier. The concrete supplier shall have made test on all proposed mixes within the six months prior to supplying concrete to the job. Certified results of these tests shall be made available to the Town upon request.

WATER			
Item	**Minimum Advance Frequency**	**Town Presence Required**	**Notice (Hours)**
Backfill	See Section B.5.3a	No	1
Flushing (*1)	End of Construction (*2)	No	1
Pressure Testing (*1)	End of Construction (*2)	Yes	48
Sterilization (*1) Lab confirmation of free chlorine level	End of Construction (*2)	Yes, unless performed by Certified Lab	24
Bacteriological Testing (Lab)	End of Construction (*2) 8:00 a.m. to 2:30 p.m Monday - Thursday	Yes	1

SANITARY SEWER GRAVITY			
Item	**Minimum Advance Frequency**	**Town Presence Required**	**Notice (Hours)**
Backfill	See Section B.5.3.b	No	1
Flushing (*1)	End of Construction (*2)	No	1
Television by Town	End of Construction (*2)	Yes	48
Air Test (*1)	End of Construction (*2)	Yes	48
Deflection	No Sooner than 30 Days after Backfill	Yes	48

SANITARY SEWER FORCE MAIN			
Item	**Minimum Advance Frequency**	**Town Presence Required**	**Notice (Hours)**
Backfill	See Section B.5.3c	No	1
Flushing (*1)	End of Construction (*2)	No	1
Pressure Testing	End of Construction (*2)	Yes	48

STORM DRAIN LINES			
Item	**Minimum Advance Frequency**	**Town Presence Required**	**Notice (Hours)**
Backfill	See Section B.6.3	No	1
Flushing (*1)	See Section B.6.3	No	1

ROADS			
Item	**Minimum Advance Frequency**	**Town Presence Required**	**Notice (Hours)**
Soils Borings	See Section B.4.3	No	24
Compaction	See Section B.4.3	Yes	24
Concrete	See Section B.4.3	Yes	24
Proof Rolling	See Section B.4.3	Yes	24

*1 - Schedule of water use, including estimate of amount, rate, day, time and duration must be filed ten (10) days prior to need. Water use is subject to Town approval and at prevailing rates.

*2 - Or as scheduled with the Town.

Appendix B.3 Earthwork and Sitework

B.3.1 Materials

Clean Backfill. Clean backfill material shall contain no man-made or organic material or clay pockets and shall be free of rocks, clods, or other materials larger than two (2) inches in nominal diameter. Materials from on-site excavations may be used for clean backfill provided they meet the specified requirements and contain optimum moisture content for proper compaction. Water saturated material shall not be used as clean material. If sufficient on-site clean backfill material is not available, acceptable material from an off-site borrow area shall be secured.

Backfill. Backfill shall be free of all organic materials and shall not contain any rocks larger than two (2) inches in diameter, or be in a water saturated condition.

Crushed Stone or Screened Gravel. Crushed stone or screened gravel shall meet the requirements of the North Carolina Department of Transportation Standard Specifications, latest revision, for the sizes required.

Pipe Bedding. All material used for pipe bedding shall conform to North Carolina Department of Transportation Standard Specification latest revision for size 67 stone. Any rock, run-of-bank sand, or gravel excavated on site which meets that gradation may be used.

Riprap. The stone for riprap shall consist of field stone or rough unhewn quarry stone. The stone shall be sound, tough, dense, and resistant to the action of air and water. The riprap shall be of the size required for proper erosion control and shall meet the standards for NCDOT Class 1 riprap, Class 2 riprap, Class A erosion stone or Class B erosion stone.

During placing, the stone shall be graded so that the smaller stones are uniformly distributed through the mass. The stone may be placed by mechanical methods, augmented by hand placing where necessary. The placed riprap shall form a properly graded, dense, neat layer of stone. The channel shall be undercut to allow for the following depths of riprap.

Class I	-	2'
Class II	-	2.5'
Class A	-	1'
Class B	-	2'

Rip rap shall be placed on a three (3) inch mat of #67 stone which has been placed on a filter fabric meeting NCDOT specification Section 1042.

Concrete. The following standards guide the materials used in cement as applied by NCDOT:

<u>Portland Cement</u>
Portland cement shall meet the requirements of AASHTO M85 for Portland cement Types I, II and III, except the maximum fineness requirements of AASHTO M85 do not apply to cement used in precast concrete products.

Air-entraining and chemical admixtures agents shall meet NCDOT specifications 1024.

Different types of cement shall not be mixed nor used alternately.

Cement shall be protected from contamination or damage during handling and storage. Cement which is damaged, partially set, lumped or caked shall not be used.

Fine Aggregate

Fine aggregate shall consist of natural or manufactured sand having clean, durable, hard, uncoated particles, free from dirt, wood, paper, fiber and all other foreign material and shall meet NCDOT specification Section 1014.

Natural sand shall meet the gradation requirements for No. 25 fine aggregate. Manufactured sand shall meet requirements for standard size 2MS.

Coarse Aggregate

Coarse aggregate shall consist of crushed stone, crushed or uncrushed gravel or other inert materials of similar characteristics, washed to remove clay, loam and dust. The aggregate shall be free from dirt, wood, paper, fiber and all other foreign materials and shall meet NCDOT specification Section 1014.

Coarse aggregate shall meet requirements of standard size No. 67 or No. 57. Standard size No. 78M shall be used in concrete for machine placed curb, gutter and paved ditch.

Water

Water used for mixing concrete shall be clear, potable, and free of deleterious substances.

Concrete Mix Design

Concrete shall be of the class or strength called for on the standard details or elsewhere in these specifications. Minimum strength for structures and miscellaneous items shall be Class A, 3,000 psi, and for concrete curb and gutter Class B, 2,500 psi. Mix designs shall be based on currently available materials that will be used for production of concrete to be used on the project.

Depositing

Concrete shall not be used if it cannot be placed within ninety (90) minutes of the dispatch time. Concrete shall be deposited in such a manner so as to prevent contamination by foreign material and segregation due to rehandling or flowing. Segregated concrete and/or concrete consisting of foreign material shall not be used. Depositing shall not be done when temperature has not exceeded 35 degrees Fahrenheit and rising by 10:00 A.M. Concreting shall cease when the descending air temperature in the shade falls below 40 degrees Fahrenheit. It shall not resume until the ascending air temperature rises to 35 degrees Fahrenheit. All concrete shall be kept from freezing. Frozen concrete shall be replaced. Free fall shall not exceed 5 feet in any case.

Forms

Forms may be made of wood, plywood, metal, or any other suitable material. Forms shall be mortar tight, of material strong enough to resist noticeable deflection or bulging between supports, and the interior dimensions of the forms shall be such that the finished concrete shall be of the proper shape and dimensions. The design of the forms shall take into account the effect of vibration of concrete as it is placed and also the rate of speed at which the forms will be filled.

Mechanical vibrators, of an approved type, and continuous spading and/or rodding of concrete shall be used to produce proper contact of concrete with forms and reinforcing steel so as to form a compact, dense, impervious concrete of uniform texture which is free of voids.

Curing

All concrete shall be cured by one of the following methods:

- Forms left in place for a period of seven (7) days. Exposed concrete shall be moist cured.
- Moist curing performed when forms are removed before seven (7) days. All construction joints shall be moist cured.
- Curing compound used immediately after forms are removed and all surface water has disappeared.

Finishing

All exposed structure surfaces shall have a uniform and textured surface. All form marks exposed to view shall be rubbed off with a stone. Concrete walks, drives, pads, curbs, curb and gutter and ditches shall be given a light broom finish with brush marks for curbs and ditches parallel to the curb or flow line.

Testing

Concrete shall be tested in accordance with Section IV of these standards.

Acceptance of Concrete

The Town Engineer may require as many additional tests as deemed necessary to insure the concrete acceptability. The cost of the tests shall be at no expense to the Town

Steel Reinforcing. Reinforcing for concrete structures shall conform to NCDOT specification Section 425 and 1070.

B.3.2 Construction Methods

Clearing and Site Grading. Where the lines are to be constructed in wooded areas, permanent easements shall be fully cleared and grubbed. Cleared materials shall be disposed of off of the construction site. Disposal shall be made in accordance with all local and state laws. Trees cut down on the construction site shall be hauled away from the site for proper disposal. Stumps and roots of all trees cut down outside of the excavation area shall be removed. Ground surfaces shall be graded so as to promote proper drainage and allow mowing by vehicular equipment.

All rough grading shall be completed to within 6" of finished grade prior to the installation of any pipeline or pipeline appurtenance.

Explosives and Blasting. Where permits are required for use of explosives the developer or contractor shall obtain these prior to doing and blasting.

Explosives for blasting shall be stored, handled, and used in accordance with the North Carolina Department of Transportation Standard Specifications-latest revision, all local regulations, and practices outlined in the "Blaster's Handbook" published by E.I. Dupont de Nemours and Company, Inc. Blasting shall be conducted so as not to endanger persons or property, and shall be covered or otherwise satisfactorily confined. The blaster shall be responsible for, and shall make good, any damage of whatever nature caused by blasting or accidental explosions.

Removal of Water. The bottom of all excavations shall be free from water when pipe is laid in the excavation, when concrete is placed and until work is carried above the groundwater level and is safe from flotation.

If any of the subgrade or underlying materials is disturbed by movement of groundwater, surface water, or any other reason, it shall be replaced with crushed stone or gravel.

Clean Up of Site. At the completion of the work, all debris and excess construction materials shall be removed and the right-of-way and easements shall be left clean and presentable.

All property irons shall be restored by a registered land surveyor.

All disturbed areas shall be stabilized in accordance with the NC Sedimentation and Erosion Control Ordinance.

Excavation - General. All excavation shall be made in such a manner, and to such widths, as will give ample room for properly constructing and inspecting the structures they are to contain, and for such sheeting, timbering, pumping, and drainage as may be required within the limits shown in the Standard Details.

Except where otherwise specified, excavation slopes shall be flat enough to avoid slides that will cause disturbance of the subgrade, or damage to adjacent areas. Intercept and collect surface runoff both at the top and bottom of cut slopes.

All excess excavated material and all excavated material which is unsuitable shall be removed from the site and replaced with suitable material.

Sheeting and Bracing. Place and maintain such sheeting and bracing as may be required to support the sides of the excavation, or to protect pipes and structures from possible damage, to provide safe working conditions and meet all OSHA requirements. The Contractor shall be responsible for the adequacy of all sheeting and bracing used, and for all damage resulting from sheeting and bracing failure or from placing, maintaining, and removing it. All sheeting and bracing shall be removed upon completion of the work. Portable trench boxes or sliding trench shields may be used. The Town may permit sheeting to be left in place at the request and expense of others for the purpose of preventing injury to structures or property. Any sheeting or bracing left in place shall be cut off at least 2-feet below the finished ground surface.

Rock Excavation in Trenches. All rock encountered within the limits of trenches shall be excavated. Rock shall be excavated so that generally there will be a clear space of at least 12-inches from the outside barrel of the pipe to the side of the trench. Isolated points of rock shall not come nearer than 6-inches to the pipe. At the trench bottom, the rock shall not come nearer than 6- inches to the pipe. In addition, sufficient rock shall be removed at joints to facilitate proper installation. Rock shall be fully removed at least 15-feet in advance of the laying of pipe.

Protection of Subgrade for All Excavations. To minimize the disturbance of the bearing materials and provide a firm foundation:

- Should disturbed soil or material with natural low bearing capacity be encountered, excavation shall be carried out below subgrade in limited areas. Stabilization of these areas shall be done with back-fill or coarse aggregate as required. Soils disturbed through the operations shall be excavated and replaced with backfill or coarse aggregate, as required.
- Provide positive protection against penetration of frost into materials below the bearing level during work in winter months.

Backfilling. Backfill shall be placed in layers not to exceed 6-inches loose and compacted with mechanical tamps to 95 percent of Standard Proctor AASHTO-T99 density, excepting backfill under structures, which shall be compacted to 98 percent of Standard Proctor Density, and the top 6 inches of trenches which shall

be compacted to 100 percent as shown in the Standard Details. Backfill in the roadways shall be tamped to NCDOT requirements.

Pipe trenches shall be backfilled as soon as possible after pipe installations.

Where sheeting is used, use all reasonable measures to prevent the loss of support of the pipe or backfill when the sheeting is removed. If significant volumes of soil cannot be prevented from clinging to the extracted sheets, the voids shall be continuously backfilled as rapidly as possible. Thereafter limit the depth below subgrade that sheeting will be driven in similar soil conditions or employ other appropriate means to prevent a loss of pipe support. Sheeting embedded in granular fill or backfill materials shall be left in place, in accordance with Article 1.03B, of this section.

Pipe Laying - General. Pipe laying shall in all instances be accomplished in a workmanlike manner laid true to line and grade with bell ends facing (up-grade) in the direction of laying. The various pipes shall be handled, belled-up and laid in accordance with the manufacturer's requirements and good engineering practices.

Joint deflections shall not exceed 75% of the manufacturer's recommended maximum deflection.

Pipe Bedding.

1. Type I - Shaped Bottom Bedding: Shall be so the pipe bears uniformly upon undisturbed native earth. Hand excavation is required to shape the trench to conform to the pipe barrel and the pipe bells. The pipe bells are not to support the pipe. Clean backfill shall be placed and carefully and uniformly tamped by hand to a 95% density so as to eliminate the possibility of lateral movement around the pipe (and completely under the pipe haunches) in uniform layers not exceeding six (6) inches loose to a depth of 1'-0" above the top of pipe. The remaining backfill shall be placed as described in Article B.2.5 of this section.
2. Type II - Granular Material Embedment: For Type II bedding, the trench bottom is undercut a minimum of four (4) inches below the pipe barrel grade and filled with a No. 67 stone and backfilled with clean backfill as shown in the standard detail, placed in 6-inch loose layers and compacted to 95%.
3. Type III - Granular Material Embedment: For Type III bedding, the trench bottom is undercut a minimum of six (6) inches below the pipe barrel grade and filled with an No. 67 stone to an elevation such that the pipe will be completely and uniformly bedded, as shown in the standard detail.
4. Concrete Encasement and Cradles: Shall be constructed, with Class A (3000 psi) concrete a minimum of 6" all around the pipe.

Installation Limitations. The following are limitations and bedding requirements for supportive strength and shall be adhered to at all times.

1. Type I Bedding, or greater, shall be used for all DIP, RCP, and VCP (except gravity sewers), unless conditions of poor (saturated) soil or rock are present.
2. Type II Bedding, or greater, shall be used for all PVC sewer pipe, unless conditions of poor (saturated) soil or rock are present.
3. Type III Bedding shall be used for gravity sewer lines when conditions of poor (saturated) soil or rock are present or when installing other lines under these conditions which normally require less bedding.

For water and sewer lines having 3.00 feet and less or 18.00 feet and more of cover, use Ductile Iron Pipe.

Final Grading and Landscaping. Fertilizing, seeding, and mulching of any and all areas disturbed during construction will be accomplished within the time frame allowed by the NCDENR after completion of each segment of the work. All plantings shall be maintained by the installer for a period of one (1) year after the completion of the work. Seeding shall be accomplished in accordance with the requirements of the Sedimentation and Erosion Control Practices of the State.

Contractors Qualifications. All contractors shall be properly licensed by the State of North Carolina for the classification of work they intend to perform and shall comply with all applicable laws regulating the practice of contracting. Owners/Developers shall not engage any firm or person to perform, nor shall they perform any activity for which they are not properly licensed by the appropriate licensing board of the State of North Carolina.

B.4 Streets

B.4.1 Materials

General. All materials used in road construction will meet NCDOT standard specifications for Roads and Structures - latest revision. All materials shall be new and appropriate to the application. Any material found to be defective, substandard, or damaged shall be removed from the site immediately.

Pavement. Except where otherwise indicated, North Carolina State Department of Transportation (NCDOT) Standard Specifications, latest revision, shall apply.

Fill. The portion beneath the paving foundation including the shoulders shall be carefully selected from surplus excavation on site or obtained from an outside source. Fill between the road shoulders and the limits of excavation shall be earth free from large stones, roots and rubbish. All fill material placed under the roadway shall meet the requirements of well-graded backfill specified in Appendix B.3.2.

Crushed Stone or Gravel shall meet NCDOT Section 1005.

Aggregate Base Course shall meet NCDOT Section 1010.

Asphalt Concrete Base Course shall be NCDOT, Type B-25.OC. This material shall be placed in one lift.

Asphalt Concrete Binder/Intermediate Course shall be NCDOT, Type I-19.OC. This material shall be placed in one lift.

Asphalt Concrete Surface Course shall be NCDOT Item, Type S-9.5B.

Concrete Paving and Walkways shall be Class A concrete as specified in Section B.3.1.

Tack Coat. The tack coat shall be Grade PG-64-22, Rapid Curing Liquid Asphalt, Section 605 of NCDOT Specifications.

Stone and Aggregate. Aggregate shall meet requirements of NCDOT Standards Specifications. Aggregates must be obtained from sources approved by the NCDOT. It shall be stored and handled in a manner as to minimize segregation.

Aggregate Gradation. All aggregates described in these standards shall meet the gradation and other requirements of appropriate NCDOT specifications.

Concrete. Concrete shall be as described in Section B.3.1 and NCDOT specifications, latest revision.

Joint Fillers and Sealers. Expansion joints shall be filled with cork, neoprene or rubber meeting AASHTO M153 or bituminous fiber meeting AASHTO M213. If more than 1" thickness is required, two (2) layers may be used. Filler shall be installed per NCDOT Standard 420.

Filled joints shall be sealed with hot poured rubber asphalt joint sealer per NCDOT Article 1028-2 or one (1) part low modules silicone sealant per NCDOT Article 1028-4.

B.4.2 Construction Methods

General. All work shall be done in a workmanlike manner by contractors experienced in road construction.

Any contractor working in a public street right-of-way shall do so in accordance with the "Manual on Uniform Traffic Control Devices, Part VI".

Installation of Subgrade. The subgrade shall be prepared, shaped, and compacted in accordance with NCDOT Section 500.

If required the subgrade shall be stabilized by the addition and mixing of stabilizer aggregate with the top 3-inch of subgrade in accordance with NCDOT Section 510.

Subgrade shall be proof rolled prior to placement of the base course.

Installation of Base Course. Aggregate base course shall conform to NCDOT Section 520. The finished base course for all paving shall be to the thickness shown in the standard details and formed true to crown and grade and shall consist of one layer compacted to 100% of the density obtained by compacting a sample in the laboratory in accordance with AASHTO T180 at optimum moisture content.

If the base course has been opened to traffic of any kind or contaminated by sediment, it shall be cleaned of foreign material and then subsequently regraded, shaped and proof rolled to the true line and grade before application of the next course.

Asphalt concrete base course shall be produced. Transported, placed, and compacted per NCDOT Section 610.

Installation of Asphalt Concrete Intermediate Course. Where an asphalt concrete binder/intermediate course is required the base course shall be inspected prior to placement. Any damage to the base course shall be repaired prior to placement of the binder/intermediate course.

The binder/intermediate course shall be produced, transported, placed, and compacted per NCDOT Section 610.

At no time shall the mixture be placed on a base course that has become softened by rain, weaves under the equipment, or is otherwise defective for any reason whatsoever.

Installation of Asphalt Concrete Surface Courses. Prior to placement of the asphalt concrete surface courses, the binder course or base course shall be inspected for damage or defects, and same repaired. The

surface of the binder course or base course shall be thoroughly cleaned and ready for next surface course. The asphalt concrete surface courses shall be produced, transported, placed and compacted per NCDOT Section 610. The top surface course shall be neat, uniform and free from evidence of construction traffic.

Tack Coat. Existing asphalt or concrete surfaces shall be treated with asphalt tack coat prior to placement of asphalt intermediate or surface courses. Application of the tack coat shall be in accordance with NCDOT Section 605.

Junction With Other Paving. Where new pavement abuts existing pavement, the existing pavement shall be cut back to insure obtaining the specified compaction of the new pavement courses and interlocking adjoining courses. Existing subbase courses shall be cut back from the subgrade level of the new pavement on a one-on-one slope into the existing pavement, and the bituminous courses of the existing pavement shall be removed for an additional 6-inches back from the slope. The edge of the existing bituminous courses shall be saw cut straight and true. The faces between new and existing bituminous courses shall receive an application of tack coat.

Maintenance and Acceptance. All paved surfaces shall be maintained until the roads have been accepted by the Town or State. The paved areas will not be accepted until after completion of all phases of the work, including all necessary transportation, hauling, and severe usage of the paved areas and all administrative requirements have been met.

The Town shall require any and all tests it deems necessary to ensure the pavement, curb and gutter, sidewalks and appurtenances have been installed in accordance to the standards and specifications. The owner/developer shall supply all tests at no cost to the Town.

Placement of Concrete. Materials and placement of concrete will be in accordance with the NCDOT specifications, latest revision. Machine placement of curb and gutter is acceptable. Straight forms shall not be used when forming curb and gutter in curves.

No concrete shall be placed until the depth of the excavation and character of the foundation material, the adequacy of the forms and falsework, and the placing of reinforcement and other embedded items have been inspected and determined satisfactory.

Concrete shall be placed in daylight unless an adequate lighting system is provided.

In preparation for the placing of concrete, all sawdust, chips, and other construction debris and extraneous matter shall be removed from the interior of forms. Hardened concrete and foreign matter shall be removed from tools, screens, and conveying equipment.

The temperature of the concrete shall not be greater than 90 degrees F nor less than 50 degrees F at the time of placing.

No concrete shall be used which does not reach its final position in the forms within a 20 minute interval between batches, or 90 minutes from the plant.

Surfaces other than foundations on which concrete is to be placed shall be thoroughly cleaned and wetted immediately before placing concrete in order to facilitate bonding.

Placing of concrete shall be so regulated that the pressures caused by the wet concrete shall not exceed those used in the design of the forms.

The external surface of all concrete shall be thoroughly worked during the placing by means of tools of an approved type. During the placing of concrete, care shall be taken that the methods of compaction used will result in a surface of even texture free from voids, water, or air pockets, and that the coarse aggregate is forced away from the forms in order to leave a mortar surface.

Concrete shall be placed so as to avoid segregation of the materials and the displacement of the reinforcement.

If additional concrete is to be placed against hardened concrete, care shall be taken to remove all laitance and to roughen the surfaces of the concrete to ensure that fresh concrete is deposited upon sound concrete surfaces.

The operation of depositing and compacting shall be conducted so as to form a compact, dense, impervious, concrete of uniform texture which shall show smooth faces on exposed surfaces. If any section of concrete is found porous, has been plastered, or is otherwise defective, it shall be repaired or removed and replaced in whole or in part as directed by the Town.

B.4.3 Tests and Inspections

Soil Borings. Prior to final approval of street design, the Town reserves the right to require a report and recommendation from an approved soils testing firm. Soil investigation shall include, at a minimum, test bores or test pits located 300 feet apart and in all sump locations. Test bores shall be located at the approximate street centerline and be to a depth of 8 feet below finished grade, or to auger refusal. If auger refusal is encountered, an offset bore will be made to further determine extent of rock.

Compaction Tests. Fill in the roadway shall be tested by an independent testing laboratory approved by the Town. Tests shall be performed in accordance with ASTM methods and be appropriate to the soil type. Density shall be tested every 2 lifts (12 inches) of placed backfill at intervals of one per 300 feet, minimum one per day.

Density of the base course shall be tested by an independent testing laboratory approved by the Town. Tests shall be in accordance with ASTM methods and performed every 300 feet of roadway. At least one test per day shall be performed.

Marshall Tests of Asphalt Pavement. The Marshall method of testing density shall be performed at frequency required for the owner/developer and/or contractor to determine that specifications for pavement density are being met.

The Town may require additional testing if there is reason to believe that minimum densities are not being met.

Concrete Tests. All concrete used in roadway construction shall be tested in accordance with Part 1 of this section.

Proof Rolling. All roadway areas shall be proof rolled in the presence of a Town Inspector. The travel lane shall be proof rolled on two occasions, first, when the roadbed has been completed to finished subgrade, before the base course is placed and, second, after a stone base course is in place and compacted. On each occasion, each travel lane shall be traversed as required by the Inspector, with a pneumatic tired roller, or approved vehicle of 10 to 12 tons such as a loaded dump truck or a loaded water truck. The equipment shall be operated at 2 to 4 mph.

If it becomes necessary to take corrective action, such as but not limited to underdrain installation, undercut and backfill of unsuitable material, and aeration of excessively wet material in areas that have been proof rolled, these areas shall be proof rolled again following the completion of the necessary corrections.

B.4.4 Design Criteria and Policies

Road Design Criteria.

General

1. Road plans and specifications shall be designed and sealed by a Professional Engineer licensed to practice in North Carolina and qualified in roadway design.

2. Roads shall meet all Town of Troutman standards prior to being accepted by the Town for maintenance. If items are unspecified in Town Standards, the NC Department of Transportation Manual "Subdivision Roads - Minimum Construction Standards" shall be used as a guide.

3. All street plans must be consistent with the Officially Adopted Troutman Thoroughfare Plan.

4. In residential, commercial and industrial subdivisions, driveway access generally will not be allowed directly onto thoroughfares. In group developments, driveway access to thoroughfares must be minimized, and is subject to the approval of the Town and/or State.

5. Wheelchair ramps shall be provided at all intersections and large driveways in accordance with North Carolina State Statutes.

6. Public streets shall not be constructed on embankments which serve as dams for ponds or lakes.

7. Subsurface drains shall be required where soil tests and/or construction indicate the presence of springs or other subsurface water.

8. The Town reserves the right to require a report and recommendation from an approved soils testing firm prior to final approval of street design. Test bores or test pits shall be located at a distance of 300 feet apart and at all sump locations. Test bores or pits shall be located at the approximate street centerline, and extend to a depth of 8 feet below proposed finished grade, or until auger refusal, whichever is less. If auger refusal is obtained, an offset should be made to determine if the rock is continuous.

9. Unsuitable sub base material identified by the soil tests, or located during construction, must be removed from the right-of-way and replaced with backfill as described in Section B.3.1.

10. "Stub" streets and streets intended for extension during future phases shall be constructed as close as practical to the property/phase line. If the end of the road does not match natural grade, a 2:1 cut or fill shall be provided and a NCDOT type dead end street barricade shall be installed. The design profile shall extend far enough beyond the property/phase line to indicate the extension can meet current design standards. It shall be the responsibility of the second development to construct the connection to a stub street, even if the stub street was built prior to adoption of these standards.

11. Private irrigation systems generally are prohibited within the street right-of-way. However, irrigation systems for planted medians and neighborhood entrances may be approved, provided:

- the irrigation system has a separate meter and is not connected to water lines serving any structure;
- the maintenance responsibility for the irrigation system is clearly assigned to the developer and/or homeowners association;
- a right-of-way encroachment agreement is executed between the Town and the party responsible for the irrigation system;
- subsurface drains connecting to the street storm drainage system are installed.

Intersections

1. Intersections shall be as close to 90 degrees as possible, and never less than 60 degrees.

2. Intersections with thoroughfares shall have a centerline offset of at least 800 feet unless varied by the Planning Board.

3. Intersections on local streets shall have a centerline offset of at least 200 feet unless varied by the Planning Board.

4. Where a proposed road intersects an existing thoroughfare, the crown slope of the thoroughfare shall be extended to allow for future widening, as directed by the Town Engineer.

5. Intersections with thoroughfares, commercial streets and industrial streets shall have a minimum radius of 30 feet at the right-of-way, and at the face of curb for vertical curb, or at the back of curb for valley gutter. Intersections on residential streets shall have a minimum radius of 20 feet at those locations. A larger radius as determined by the Town and/or State may be required on a case-by-case basis.

6. The maximum grade of any street within 100 feet of an intersection shall be 5% unless varied by the Town Engineer.

7. Site triangles shall be to Town or State requirements, whichever controls and shall be so noted on the final subdivision plat as well as on the engineering plans.

8. For the following items, it will be necessary to identify one street at an intersection as the major (or through) street, and the other street as the minor (or intersecting) street.

    - The crown of the minor street shall be flattened and sloped to match the gutter line of the major street. A minimum distance of 30 feet shall be noted for the transition from normal crown. Adequate drainage must be provided to prevent runoff from entering the street, or ponding in the transition zone.
    - No more than 1 CFS of drainage may cross the minor street at an intersection (for the 10 year storm). No drainage shall cross the major street at an intersection.
    - The plans shall indicate with an arrow which direction drainage is intended to flow at the intersection.

Cul-de-sacs

1. All permanently dead-ended residential streets shall end in a cul-de-sac with a minimum 35-foot paved radius plus curb and gutter and a minimum 50-foot right-of-way radius.

2. All permanently dead-ended commercial or industrial streets, shall end in a cul-de-sac with a minimum 42.5-foot paved radius, plus curb and gutter and a minimum 50-foot right-of-way radius. These cul-de-sacs may contain a planted median in accordance with the standard details

3. All temporarily dead-ended streets may be required to end in a temporary cul-de-sac approved by the Town Engineer and the Town Fire Department.

4. Dead-end residential streets with a centerline grade greater than 3% draining towards the cul-de-sac shall have catch basins to intercept gutter flow before it enters the cul-de-sac.

5. At the discretion of the Town Engineer, vertical curve K values in cul-de-sacs may be reduced to 16 for crest curves, and 24 for sag curves.

Driveways

1. Residential driveways shall be in accordance with the Troutman UDO.

2. Commercial driveways shall be in accordance with the Troutman UDO and with NC Department of Transportation's "Policy on Street and Driveway Access to North Carolina Highways", January, 1987.

3. Where vertical curb and gutter exist, all driveway ramps shall be constructed of Portland cement concrete a minimum of six (6) inches deep. The ramp must rise four (4) inches above the flow line of the gutter at a point no closer than two feet from the gutter.

4. Driveway ramps shall not obstruct sidewalks and must incorporate wheelchair ramps if necessary.

B.4.4a Design Criteria by Street Classification

B.4.4a Design Criteria by Street Classification

General. Streets are to be identified as to classification during the preliminary plat review. The Town shall make the final determination of proposed street classifications in conjunction with preliminary plat approval. Street design standards shall be as listed below, unless otherwise approved by the Town Engineer.

Thoroughfare Streets. Existing and proposed thoroughfares are identified on the officially adopted Troutman Thoroughfare Plan. All proposed streets identified as thoroughfares shall be designed in accordance with American Association of State Highway and Transportation Officials (AASHTO) and Institute of Transportation Engineers (ITE) design procedures. Plans are subject to the review and approval of the Town and the State.

Urban Residential Streets. Urban residential streets are intended to serve traffic with origins and destinations specifically within a residential subdivision. These streets shall have cross sections as prescribed in the Standard Details Specific design standards shall be as follows:

Description	Local	Collector
Min. centerline Radius	230’	310’
Min tangent length	100’	100’
Min VC sight distance	200’	250’

K value (crest)	30	45
K value (sag)	30	45
	Minimum length of VC, L= KA (A= algebraic difference in grades)	
Max. grade	10.0%	7.0%
Min grade	2.0%	2.0%

Commercial and Industrial Streets. Commercial and industrial streets generally serve traffic in business areas. Specific design standards shall be as follows:

Min. centerline Radius	600’
Min tangent length	100’
Min VC sight distance	300’
K value (crest)	45
K value (sag)	45
Minimum length of VC, L= KA (A= algebraic difference in grades)	
Max. grade	7.0%
Min grade	2.0%

Private Rural Preservation Residential Streets. Private Streets are intended to serve traffic with origins and destinations specifically within a residential subdivision in the Rural Preservation district only. These districts shall have cross sections as prescribed in the Standard Details. Specific design standards shall be as follows:

Description	Local	Collector
Min. Centerline Radius	150’	230’
Min. VC sight distance	150’	200’
K value (crest)	20	30
K value (sag)	20	30
Min. lenthth of VC, L =KA		
(A= algebraic difference in grades)		
Max. grade	12.0%	9.0%
Min. grade	2.0%	2.0%

B.5 Water and Sewer

B.5.1 Materials

B.5.1a Water

Ductile Iron Pipe. Pipe shall be manufactured in accordance with the requirements of ANSI/AWWA C151/A21.51. Design shall be done for external and internal pressures separately, using the larger of the two for the net design thickness. An additional allowance shall be made for corrosion and casting tolerances. The thickness design for shall be in accordance with ANSI/AWWA C151/A21.51 and based on the following conditions:

1. 42-inches minimum cover and maximum cover as shown on the plans;

2. Laying condition - Project laying conditions;
3. A minimum working pressure of 150 psi.
4. A surge pressure of an additional 100 psi.

The minimum class thickness shall be Class 50 or pressure class 350.

The ductile iron pipe shall be supplied in nominal lengths of 18 or 20 feet.

The ductile iron pipe shall be cement-mortar lined and seal coated, where applicable, in accordance with ANSI/AWWA C104/A21.4, and bituminous coated on the exterior in accordance with ANSI/AWWA C151/A21.51.

Pipe joints shall be mechanical or "push-on" manufactured in accordance with ANSI/AWWA C111/A21.11, or flanged joints in accordance with ANSI/AWWA C115/A21.51.

Each joint of ductile iron pipe shall be hydrostatically tested to 500 psi at the point of manufacture, in accordance with ANSI/AWWA C151/A21.51, before the outside coating and inside lining are applied. Testing may be performed prior to machining bell and spigot. Failure of ductile iron pipe shall be defined as any rupture or leakage of the pipe wall.

All materials used in the production of the pipe are to be tested in accordance with ANSI/AWWA C151/A21.51 for their adequacy within the design of the pipe, and certified test results are to be provided to the Town upon request.

Pipe shall be as manufactured by the American Cast Iron Pipe Company, United States Pipe and Foundry Company, Griffin Pipe Products Company, or equal.

Restrained joint pipe shall be used when the pipe location excludes the use of thrust blocks and anchors for proper support.

All ductile iron pipe for water lines shall have a warning tape placed 12” above the pipe for its entire length.

Ductile Iron or Cast Iron Fittings. All fittings shall be ductile iron, mechanical joint or flanged, as required, in accordance with ANSI/AWWA C153/A21.53 or ANSI/AWWA C110/A21.10.

Mechanical joints shall be in accordance with ANSI/AWWA C111/A21.11.

All fitting interiors shall be cement-mortar lined and seal coated, where applicable, in accordance with ANSI/AWWA C104/A21.4, and the outside shall be bituminous coated in accordance with ANSI/AWWA C151/A21.51.

Sleeves shall be long body type.

Polyvinyl Chloride Pipe (PVC) and Fittings. All PVC water pipe is to be in accordance with AWWA C-909. Pipe shall have push-on joints with integral bell and locked in gasket and shall conform to ASTM D3139. The bell shall consist of an integral wall section with a locked-in, solid cross section elastomeric ring which meets the requirements of ASTM F-477. Pipe will also be the type approved by the National Sanitation Foundation, and shall bear the NSF logo and shall be manufactured with DI pipe OD’s.

All pipe for 4-inch and larger mains shall conform to AWWA-Standard C909, Pressure Class 235. Water mains less than 500 linear feet in length may use 2" SDR 21 Pressure Class Rating ASTM D2241 pipe. All fittings shall be mechanical joint ductile iron as specified in this section.

PVC pipe will be used only in areas where the highest working pressure is 125 psi or less, and/or the line is greater the 1,000 feet from an existing or proposed well or booster pump station. Maximum line size for PVC pipe is 12-inches. Minimum cover is 42-inches. Ductile iron pipe will be required in all locations where the working pressure exceeds 125 psi as measured or calculated, where cover is less than 42-inches or where pipe size exceeds 12-inches and/or the line is less than 1,000 feet from an existing or proposed well or booster pump station.

All pipes and materials are to be tested according to the requirements of AWWA Standard C-909. Certified test results are to be provided to the Town when requested.

PVC water pipe shall be installed as shown in the Standard Details or as recommended by the manufacture, whichever is stricter.

PVC pipe for water lines shall have warning tape and tracer wire for its entire length.

Steel Pipe for Cased Crossings. Cased crossings of roads and railroads shall meet standards for Steel Pipe for Cased Crossings of this section and the applicable controlling agency (i.e. NCDOT, RR).
Gate Valves and Tapping Valves. Gate valves and tapping valves shall be resilient wedge or double disc, non rising stem type manufactured and tested in compliance with the appropriate section of ANSI/AWWA C-509. The valve body shall be cast or ductile iron. All interior and exterior exposed iron surfaces shall be epoxy coated.

Valves shall have mechanical joints for buried service and flanged joints for non buried exposed installation. Valves shall have "O" ring seals, two (2) inch operating nut for burial service, handwheel for exposed installation and shall open left. Valves shall be Mueller or equal by Clow or Darling.

An extension valve box shall be placed over each buried valve with the top set flush with the surface or finish grade.

Automatic Air Release Valves. Air release valves shall be Crispin Pressure Air Valves, Model P 20, with a vacuum check unit, Val-Matic, Model VM-45, with a vacuum check unit or equal as approved by the Utilities Director. These valves shall be suitable for 150 psi working pressure and designed to allow air to escape automatically while the main is in service and under pressure. The valve shall be housed in an approved manhole and shall be installed in accordance with the manufacturer's recommendations. Air release valve locations shall be approved by the Town Engineer, and shown on the plans.

Air release valves are to be used at the option of the Town engineer, and are to generally be located in new construction only.

Tapping Sleeves and Tapping Saddles. Tapping sleeves for all pipe 4-inches and larger shall be mechanical joint Mueller H-615 or approved equal. All sleeves shall have a minimum of 200 psi working pressure and shall be pressure tested in place before the tap is made. All sleeves shall be ductile iron or cast iron. All taps shall be machine drilled, no burned taps will be allowed.

Valve Boxes. Adjustable valve boxes shall be gray cast iron of the dimensions specified in the Standard Details of these standards. Boxes and extensions shall be of the "slip-on" or Screwed type as shown on the

standard details. The word "water" shall be cast into the lid. The valve box shall be Tyler or equal. A debris cap shall be installed in the top of each valve box.

Fire Hydrants. Fire hydrants shall conform to AWWA C-502. Hydrants shall be cast or ductile iron bodied with safety flange protection, fully bronze mounted, self oiling dry top design with "O" ring seals. Hydrants shall be traffic model with 5 ¼-inch main valve opening, 2-2 ½-inch hose nozzles, and 1-4 ½-inch pump nozzle. Hydrants shall have national standard threads, 6-inch MJ shoe connection and 1½-inch pentagon operating nut opening counterclockwise. Hydrants shall be Mueller Super Centurion model A-423 or equal or Kennedy or Clow.

The hydrant barrel shall be of sufficient length to provide a minimum of 42-inch bury. Hydrants shall set a minimum of 12 feet from the edge pavement, unless otherwise approved. Washed stone shall be placed around the base of each hydrant and 12-inches around the barrel to within 12-inches of the finished grade. Hydrants shall be set plumb and securely restrained to the hydrant valve and main tee.

All hydrants shall be supplied with a locking security device equal to the Mueller Hydrant defender and keyed for the Town of Troutman.

Taps. For taps 2" diameter or less, saddles and corporation cocks shall be used. 3/4", 1" and 2" tapping saddles shall be Rockwell Type 313 or approved equal. Brass tapping saddles shall be used for taps into existing 2" PVC or galvanized pipe; Ford S-70-203 for 3/4" taps, Ford S-70-204 for 1" taps, or equal.

Corporation cocks shall be as manufactured by Ford Model F-1000 for 3/4" and 1" taps and Model FB-1000 for 2" taps. Equal models manufactured by Mueller, Hayes and other reputable manufactures are also acceptable. Corporation cocks shall have AWWA standard tapered threads.

Taps larger than 2" shall be made using the appropriate size tapping sleeve and valve. On a "dry line", the connection shall be made with a tee and valve or by tapping.

Service Lines. Service lines shall be a minimum of 3/4". Lines 3/4" through 2" shall be type "K" soft copper. Female iron thread, male iron thread, flared, pack joint or other approved fittings may be utilized. Service lines greater than 2" may be ductile iron pipe with cast or ductile iron fittings.

Metersetters and Boxes. Residential meter boxes and metersetters shall be provided by the developer. The developer will provide the Town with the meters. The Town will install a meter when requested by a builder. Metersetters shall be installed with locking wing on the Town's side of the meter.

Commercial and industrial meters shall be of a size and configuration approved by the Town. All meters over 1" shall have a bypass as shown in the Standard Details. Meter by pass lines for fire protection shall have a detector check, or if the by pass line is to be used for purposes other than emergency fire protection, a meter shall be installed.

The Town shall install all meters at owner's expense.

All meter connections shall have an approved backflow prevention device.

Multiple Meter Assemblies. The use of multiple meter assemblies must be approved by the Utilities Director. When allowed, meter assemblies shall be as shown in the Standard Details. Meters shall be purchased from and set by the Town. A master meter is required at the property line and shall be of a size and configuration as approved by the Town. A backflow preventer with valved bypass shall be located in the master meter vault. Individual meters shall be Town standard. Piping between the master meter and the

individual meters shall be the choice and responsibility of the Owner. The Town shall not be responsible for repair or maintenance of these lines.

Backflow Preventers. All new or renewed connections require backflow prevention in accordance with this section and Chapter 28: Utilities of the Town of Troutman Code of Ordinances. Backflow prevention shall be installed on the customer's side of the meter.

Residential meter assemblies purchased from the Town for domestic service only will be equipped with check valve devices and will not require additional backflow prevention devices.

For any service other than domestic, i.e.; pools, irrigation systems, commercial, industrial, etc will require reduced pressure zone (RPZ) backflow prevention. There devices shall be installed above ground or in a below ground vault with a positive relief drain per code requirements. Installation, ownership and maintenance of these devices shall be the responsibility of the customer. Installation and annual inspection certification shall be furnished to the Town in accordance with the current Town policy.

B.5.1b Sanitary Sewer

Ductile Iron Pipe and Fittings. Ductile iron pipe and fittings shall meet the requirements of Appendix B.5.1.a of these standards, for laying conditions and pressures to be encountered.

Polyvinyl Chloride Gravity Sewer Pipe (PVC). PVC gravity sewer pipe and fittings shall be manufactured to the requirements of ASTM D-3034 from materials meeting ASTM D-1784. Minimum wall thickness shall be SDR 35 for sizes 8-inches thru 15-inches. Pipe and fittings shall be manufactured with bell and spigot type joints for use with rubber gaskets conforming to ASTM F477. No solvent cement joints will be permitted except as specifically authorized by the Town.

For outfalls greater than 15-inches in diameter, the Town will consider use of larger diameter ribbed PVC gravity sewer pipe with integral bell and gasketed joint. All requested product information shall be submitted to the Town for review prior to submittal of the engineering documents.

Sanitary sewer laterals may be Schedule 40 PVC with integral bells and solvent cement joints.

All PVC gravity sewer pipe shall have stone bedding as shown on the Standard Details.

Sewer Force Mains. PVC pressure pipe may be used for force mains 4-inches to 12-inches. PVC pressure pipe for the force mains shall be AWWA C909 Pressure, Class 235 with integral gasketed bell and spigot joints. Outside diameter of the pipe shall conform to ductile iron pipe O.D's. Fittings for PVC pressure pipe shall be mechanical joint ductile cast iron conforming to ANSI/AWWA C153.

High density polyethylene (HDPE) pressure pipe with heat fused joints will be considered on an individual project basis.

Warning tape and tracer wire shall be installed continuously along force mains.

No pressure sewer systems will be allowed. No connections to existing force mains will be permitted, except when special permission is granted by the Town under unusual circumstances.

Steel Pipe For Cased Crossings. Steel encasement pipe shall be spiral welded or smooth-wall seamless, consisting of grade "B" steel with a minimum yield strength of 35,000 psi and manufactured in accordance with ASTM A139 and A283.

The pipe thickness shall be as required by the encroachment agreement obtained from the controlling agency, but in no case be less than 0.188 inches and the ends shall be beveled and prepared for field welding at the circumferential joints. Thicker encasement pipe may be required by the North Carolina Department of Transportation, Railroads or other agencies.

The pipe may have to be coated inside and outside, in accordance with the NC Department of Transportation or the American Railway Engineering Association's specifications. All encasement pipe must be approved by the appropriate controlling agency (i.e. NCDOT, RR, etc.) prior to ordering the material.

If the encasement pipe is used to carry a sewer main, then a vent pipe shall be installed. The vent pipe shall be made from ASTM A139 and A283, grade "B" steel, with a minimum yield strength of 35,000 psi and coated as described above. The vent pipe location shall be approved by the appropriate agency prior to installation.

All carrier piping shall be mechanical joint or slip joint ductile iron. The minimum inside diameter casing shall be as shown in the standard details.

RCP Sanitary Sewer Pipe. For sewer outfalls having diameters 18" or greater, concrete gravity pipe manufactured according to ASTM Specifications C-76 may be utilized as approved by the Utilities Director.

Precast Manholes. Manholes shall be manufactured in accordance with ASTM C478. Manholes may have monolithic or poured-in-place bases, flat tops or eccentric cones and may have precast concrete or built in place concrete or masonry inverts. Inverts shall be a minimum of 3 inches thick at the invert of the outlet pipe. Concentric cones and precast inverts shall not be allowed.

Manholes shall be sized according to the pipe sizes and angles between the pipes. Standard manholes shall have a minimum ID of 4 feet. Manholes with inside drops shall have a minimum ID of 5 feet. Joints shall be sealed with butyl rubber sealant meeting Federal Specifications (GSA-FFS) ss-s-00210. "O" ring joints shall <u>not</u> be allowed. A flexible pipe connector shall be supplied with the manholes to tie the pipe to the barrel section. These flexible connectors shall meet the requirements of ASTM C923.

Manholes deeper than 3'0" shall have steps. Manhole steps will be press set plastic, or equal. Steps will not be used on the outside of raised manholes.

Brick or Block Manholes. Brick or block manholes shall be of the same dimensions as shown for precast manholes in the Standard Details and called for in A above.

Brick shall be clay or shale meeting the requirements of ASTM C62 for Grade SW or concrete brick meeting requirements of ASTM C55 for Grade S-II. The manhole base shall be class "A" concrete, placed on 8" compacted stone. Base shall be a minimum of 8 inches thick and of a diameter 8 inches greater than the outside diameter of the manhole. The invert may be class "A" concrete, or brick masonry plastered with a minimum of 1" of mortar. All mortar shall be Portland Cement, 1:3 mix. Walls less than 12 feet below grade shall be 8 inches thick, for walls greater than 12 feet deep, use 12 inch walls and increase base thickness 4 inches and base diameter by 8 inches. The outside of the manhole shall be plastered with Portland Cement, 1:3 mix, 1/2 inch thick. Minimum joint is 3/8 inch. Manholes greater than 24 feet deep shall be specially designed for the actual depth.

Concrete block shall be solid curved and of the special type specifically manufactured for sanitary sewer manhole construction, conforming to ASTM C139 (except for shape as hereinbefore specified). Only

concrete block made with Type II Portland Cement having less than 8% tricalcium aluminate shall be considered for acceptance. The base and wall thickness shall be as for the brick manhole. Mortar shall be Portland Cement, 1:3 mix. Joints shall be a minimum of 1/2 inch. Corrugated, galvanized masonry ties shall be used at a rate of one/block to connect inside and outside walls in the deeper manholes. The outside of the manhole shall be plastered with Portland Cement, 1:3 mix to a depth of 1 foot below ground level.

All brick and block masonry units shall be thoroughly clean. The bed which is to receive the masonry unit shall be thoroughly cleaned and wetted with water before placing the mortar on. All masonry structures will be constructed by an experienced, qualified bricklayer.

Brick and block manholes shall be constructed with solid joints so that there are no voids between brick or block units. Sufficient mortar shall be spread over all adjoining faces of the previous new unit so that as the new unit is slid into place mortar is extruded between the new and previous units forming a solid joint.

Monitoring Manholes. Those commercial and industrial dischargers that require monitoring manholes shall provide a monitoring manhole easily accessible in the public right-of-way. All discharge from the property must pass through a monitoring manhole before entering the public sewer system.

Manhole Rings and Covers. Manhole rings and covers Vulcan or equal as shown in the Standard Details. All covers will be marked "SEWER" unless otherwise required by the Utilities Director or these specifications.

Manholes located in off-street locations in non-residential areas shall be extended one foot above finished grade. Manholes may be flush with the finished grade in residential area. Manholes in flood plains shall extend 2 feet above the 100-year flood elevation or be provided with sealed covers and vented.

Manholes which are not to be sealed shall have 2 vent holes.

Pump Stations. Pump stations shall be designed and reviewed on a case by case basis as required by existing or proposed conditions.

Pump stations shall meet the requirements of North Carolina Authorities. All pump stations shall be designed for the peak flow of the final projected development.

All pump stations shall be duplex, except those serving a single residential dwelling, or as specifically excepted by the Utilities Director.

Pump stations shall be equipped with:

1. Pressure gauges
2. Check valves
3. Wet well fillets
4. Shut off valves (plug valves)
5. Lockable hatches
6. Area light(s)
7. Security fencing
8. Alarms (light, horn and wireless telemetry)
    a. High water
    b. Power failure
    c. Pump failure
    d. Low water

9. Spare parts
10. Level controls (lead, lag, shut-off, high level, and low level)
11. Alternator pump control
12. Emergency pumper connection: typically a 4" stainless steel cam-lock on 4" ductile iron pipe with plug, valve, stubbed up from force main, along with plug valve in force main outside of pump station, in order to allow a portable pump to discharge into the force main and bypass the pump station. Configuration of pumper connection and valves shall be such that the pump station in its entirety can be isolated and taken out of service while using portable pump to bypass the station.

All other appurtenances required for a safe and efficient station which is easy to operate and maintain shall be included at the developer's expense.

The wet well shall be designed using NCDENR Division of Water Quality formula for active storage volume.

Pumps shall be designed to cycle as duty and stand-by pump. Both pumps shall be capable of coming on line together in case of an emergency. The alarm shall be activated in this situation.

Pump stations and appurtenances shall not be located in flood prone areas and shall be protected from the 100-year flood.

B.5.2 Construction Methods

B.5.2a Water

Installation. Water lines shall be installed in accordance with the construction methods for site work in Section B.3.2, and in accordance with the Standard Details and design criteria.

Fire Hydrant Locations. As a general rule, hydrant spacing shall not exceed 1,000 feet. In closely built areas, hydrant spacing may be required every 500 feet. Hydrants should be located as close to street intersections as possible with intermediate hydrants along the street length to meet the area's requirements. The final location of all hydrants is subject to approval by the Troutman Fire Department.

Taps. Except for new development, water taps shall be made by the Town at the expense of the property owner or developer at whose request the tap was made. Water taps may be made, at the option of the Town and as approved by the Utilities Director by an approved licensed, bonded utility contractor or plumber using standards described in this manual and under supervision of the Town. In the event the Town does not make the tap, the Utilities Director shall be notified 48 hours before any existing water line is to be closed. A "live tap" may be required at the option of the Utilities Director.

In all new developments, the developer shall make all taps and run all services to the meter setter at the time of line installation. Copper service lines shall be one piece from the mail to the meter setter.

Contractor Qualifications. Qualifications shall be as stated in B.3.2.

B.5.2b Sewer

Installation. Sewer lines shall be installed in accordance with B.3.2, and in accordance with the Standard Details and design criteria.

Service Connections to Sewer System. Except for new development sewer connections shall be made by the Town, at the expense of the property owner or developer, or at the option of the Town, by an approved, licensed, bonded utility contractor or plumber, in accordance with the standards of this manual. The Town shall inspect all taps. In all new developments, the developers shall run all services at the time of installation of the sewer. Where taps are made at the time of installation of the sewer, the following shall apply:

1. With prior approval of the Utilities Director, service connections may be made into the nearest manhole. Connections into manholes shall be made by coring the manhole and connecting the lateral using flexible rubber connectors.
2. Where making a service connection directly to the main line, the following shall apply:
    a. Provide wye fittings at location of service connection.
3. The lateral shall be installed from the main line to the edge of the right-of-way. Stub-outs shall be provided for every property abutting the line. The location of the end of the lateral shall be formed with a clean-out in accordance with the standard detail.
4. The service connection shall be located by distances from manhole to manhole. The distances shall be recorded on a reproducible medium and submitted to the Town for their records.
5. Sewer laterals shall be a minimum of 4" diameter and be PVC (Schedule 40) or cast iron soil pipe.
6. Stub outs may be required on sanitary sewer outfalls on a case by case basis.

Contractor Qualifications. Qualifications shall be as states in B.3.2.

B.5.3 Tests and Inspections

B.5.3a Water

Backfill. The Town reserves the right to have any questionable backfill tested by an independent testing laboratory, approved by the Town, at the developer's/owner's expense.

Flushing. At completion of work, lines shall be thoroughly cleaned by flushing with potable water to remove all dirt and debris. Pipeline shall be flushed at a rate of at least 2.5 feet per second for a duration suitable to the Utilities Director.

Leakage Test. The water line shall be tested for leakage in conformance with AWWA C600 as modified herein. Leakage tests shall be conducted on a schedule agreed upon by the Utilities Director and the Contractor. Town inspection is required during the tests.

The pipe shall be filled with potable water for a period of 24 hours before testing begins. It shall be ensured that the pipe is full of water and all air has been removed before testing.

The water line shall be tested at 1.25 times the highest working pressure along the section, or 200 psig, whichever is greater. The test shall be of at least 2 hours duration and the pressure may not vary more than plus or minus 5 psig during the test.

All exposed pipe, fittings, valves and hydrants shall be visually examined during the test. Leakage shall be no greater than the amount determined by the formula:

$$Q=0.0075\ DLN$$

Where:

Q= allowable leakage in gallons per hour
D= nominal diameter of pipe in inches
L= length of section tested in thousand feet
N= square root of average test pressure

Pipe having more than allowed leakage shall be repaired. All visible leaks shall be repaired regardless of the amount of leakage.

Valves. Valves shall be field tested as directed by AWWA Specification C508 and C509 as applicable.

a. During the last stages of the test and without any reduction in pressure, first the hydrant valves will be closed, then progressing in an orderly manner from the end opposite from the test pump, each main line valve will be closed and pressure released to determine if it is holding pressure (minimum 30 minutes).
b. Unless otherwise directed by the Utilities Director, all butterfly valves will be tested to 150 psi for a minimum of 30 minutes (each) after the pipeline has been successfully tested.

Valves shall be tested on a schedule agreed upon by the Utilities Director and the Contractor. Town inspection is required during the tests.

Sterilization. Sampling taps shall be provided every ½ mile and at the end of each branch. Additional taps may be required if during construction trench water or excessive amount of dirt or debris have entered the line. Taps shall be located and constructed so samples may be easily collected without danger to personnel or likelihood of sample contamination.

Sampling taps may be used as blow-offs. The number and location of the taps/blowoffs must be approved by the Director of Utilities. Hydrants may not be used for bacteriological sampling.

All parts of a potable water system shall be sterilized in accordance with AWWA C651 and these specifications. Preventive and corrective measures during construction (AWWA C651) should be adhered to during construction to ensure success of the sterilization process.

Lines shall be chlorinated to a minimum free chlorine residual of 50 mg/l for 24 hours. When the Contractor has determined that the line has been chlorinated to the proper level, he shall request a laboratory confirmation of the free chlorine level. Advance notice shall be given to the Utilities Director prior to requesting sampling for chlorine level concentration as required in B.5.1. In lieu of using Town Personnel, the Contractor may use an approved certified testing lab.

After the required contract time, the Contractor shall flush the line and all appurtenances with Troutman distribution water until completely purged.

No bacteriological samples will be collected at points where the free chlorine residual exceeds the ambient distribution system free residual by more than 0.5 mg/l.

Care must be taken to discharge the chlorinated water in a manner which will not endanger plant or animal life or be unsafe.

Bacteriological testing/sampling shall be done on the same day the line is flushed. Bacteriological samples shall be taken by the contractor and transported to a laboratory approved by the Town for testing. One copy of the test report shall be furnished to the Town.

Each sample shall be marked legibly, identifying with letters or numbers for each sampling point.

B.5.3b Sewer

Backfill. The Town reserves the right to have any questionable backfill tested by and independent testing laboratory, approved by the Town, at the developer's/owner's expense.

Flushing. At completion of work, lines shall be thoroughly cleaned by flushing with water to remove all dirt and debris. Pipeline shall be flushed at a rate of at least 2.5 feet per second for a duration suitable to the Utilities Director. An approved source of non-potable water may be used to flush sewer lines, however a method to keep silt and debris from entering the pipe must be demonstrated and approved.

Obstructions/Visual Inspection. The pipe shall be visually inspected from manhole to manhole using lights, mirrors, or other devices for visual inspection. All obstructions shall be removed, and the lines from one manhole to the next shall exhibit a fully circular pattern. Lines which do not exhibit a true line and grade or have structural defects shall be corrected to meet specifications. The Town reserves the right to TV lines to detect sources of leakage, damage or improper construction..

Leakage. Leakage tests shall be conducted on a schedule agreed upon by the Utilities Director and the Contractor. Town inspection is required during leakage tests.

Each section of the line between manholes and each manhole shall be tested. All defects shall be corrected to the satisfaction of the Town.

For pipe larger than 24 inches hydrostatic test shall be conducted. Exfiltration or infiltration shall not exceed 100 gallons per inch of pipe diameter per mile per day for any section. Hydrostatic tests on lines shall be performed with a depth equal to the elevation of the ground surface at the low end or a maximum of 25 feet. Minimum depth at the upper end shall be at least 5 feet above the crown of the pipe or the groundwater level whichever is higher.

For purposes of determining maximum allowable leakage, nominal diameter and depth below grade of manholes shall be used. Maximum infiltration/exfiltration for manholes shall be one (1) gallon per foot of diameter per foot of depth per day.

For pipe 24 inches in diameter and less low pressure air testing shall be used in lieu of hydrostatic testing. Low pressure aid test shall comply with ASTM C828 for PVC and Ductile Iron pipe and ASTM C924 for concrete pipe. The line will be pressurized with aid to 4 psi and allowed to stabilize for 2 minutes. After stabilization, the pressure will be decreased to 3.5 psi and the length of time for pressure to drop to 2.5 psi will be observed.

To simplify the ASTM procedure, the following table shall be used to determine the test time.

Nominal Pipe Size (inches)	Time (T)-(Min.:Sec/100ft)
4	0:18
6	0:42
8	1:12
10	1:30
12	1:48
15	2:06
18	2:24

21	3:00
24	3:36

In lieu of Hydrostatic test, Manholes may be vacuum tested after all pipers are tied in, but before backfilling or installing the frame and cover. After pipes are plugged and braced the testing machine shall be installed and a vacuum of 10 inches of mercury placed on the inside of the manhole. When the vacuum reaches 10 inches of mercury the vacuum shall be shut off and the time to drop to 9 inches of mercury is to be observed. If the vacuum drops from 10 to 9 inches in less time than allowed by the following table the test fails and the leak shall be located and repaired and the test repeated.

MH DIA.	Min. Time (Min:Sec)
4’	1:00
5’	1:15
6’	1:30
7’	1:45
8’	2:00
10’	2:30

Deflection Test. No sooner than thirty (30) days after final backfill installation, each section of PVC pipe shall be checked for vertical deflection using an electronic deflectometer or a rigid "Go-No/Go" device. Vertical deflection shall not exceed 5% of the inside pipe diameter. Pipe exceeding the allowable limit shall be repaired and retested. Town inspection of the test is required.

B.5.3c Sanitary Sewer Force Mains

Backfill. The Town reserves the right to have any questionable backfill tested by an independent testing laboratory, approved by the Town at the developer’s/owner’s expense.

Flushing. Force main lines shall be flushed in the same manner as gravity lines.

Leakage Test. The force main shall be tested for leakage in conformance with AWWA C600 as modified herein.

The pipe shall be filled with water for a period of 24 hours before testing begins. It shall be ensured that the pipe is full of water and all air has been removed before testing.

The force main shall be tested at 1.5 times the highest working pressure along the section, or 100 psig, whichever is greater. The test shall be of at least 2 hours duration and the pressure may not vary more than plus or minus 5 psig during the test.

All exposed pipe, fittings, valves and hydrants shall be visually examined during the test. Leakage shall be no greater than the amount determined by the formula:

$$Q = 0.0075\ DLN$$

Where:

Q= allowable leakage in gallons per hour
D= normal diameter of pipe in inches
L= length of section tested in thousand feet
N= square root of average test pressure in psi

Pipe having more than allowed leakage shall be repaired. All visible leaks shall be repaired regardless of the amount of leakage.

Leakage tests shall be conducted on a schedule agreed upon by the Utilities Director and the Contractor. Town inspection is required during the tests.

B.5.4 Design Criteria and Policies

B.5.4a Water System Design Criteria

1. Minimum main line pipe size shall be 6 inches. Except when the length of line is less than 500 feet or not part of a loop, 2" may be used.

2. Minimum pressure in system shall be 20 psi at peak demand (fire flow). Fire flow shall be determined in accordance with ISO (Insurance Services Office) schedule, available from the Fire Department.

3. Minimize dead ends, and where they must occur provide a fire hydrant per the standard details. The fitting(s) required at a dead end line shall be determined by the Utilities Director.

4. Minimum cover shall be 42 inches.

5. Install valves as follows: three at a cross; two at a tee; one main line valve at each hydrant; one on a single hydrant branch. The location of the valves shall be subject to approval by the Utilities Director.

6. Install valves on loops so a maximum of 1000 feet can be taken from service without affecting other areas. Install valves on both sides of the street when a water line crosses a major or minor thoroughfare.

7. Separate water lines 10 feet horizontal distance from sewer lines (existing or proposed) or keep water line 18 inches clear above sewer line. Where 18 inches clear vertically cannot be maintained below or above the sewer line, both lines shall be mechanical joint ductile iron a minimum of 10 feet on either side of the crossing. Center the crossing at the center of the pipe, both lines.

8. Maximum spacing between fire hydrants shall be 1000 feet, (500 foot radius).

9. Backflow preventers shall be supplied for every service connection.

10. Vaults shall have aluminum hatch doors with lift assist and shall be capable of withstanding expected traffic loads.

11. All bypasses shall have check valves installed.

12. Reduced pressure principle backflow preventers are to be installed on all lines to installations of nonresidential uses on all lines that feed fire protection or irrigation systems.

13. Water line drawings and specifications shall bear the seal of a registered professional engineer licensed to practice in North Carolina and the installation of the system shall be inspected and certified by the engineer in accordance with N.C.A.C. T15A: 18C .0303.

14. Water lines not located within a street right-of-way shall have a minimum 30' permanent easement (15' each side of center line) in the Town's name. A 50' temporary construction (25' each side of center line, unless directed otherwise) easement shall be provided. Where utility lines are parallel and 10' apart, the 15' each side of center line may be reduced to 10' and maintain the total 30' permanent easement width.

Water Plans Checklist. Water line plans should, at the minimum, show the following information:

1. Location and dimension of all existing and proposed street and sanitary sewer rights of way.
2. Sanitary sewer and storm drain systems dotted in, showing size and material.
3. Invert of storm drains at crossings or where storm drains closely paralleled by water lines.
4. Invert of sanitary sewers at crossings and at upstream and downstream manholes.
5. Size, lengths (or stationing), and type material of water line.
6. All tees, gate valves, fire hydrants and blow offs properly labeled.
7. Legend of symbols.
8. North arrow.
9. Street names.
10. Location(s) of nearest existing valves.
11. Existing pavement, and if applicable, width and length of cut.
12. Include "General Notes" on all plans.
13. Registered Engineer's seal and signature.
14. Vicinity map, showing location of lines and a visual plan page index.
15. Date and purpose of issue.
16. Bedding type shall be shown or noted.

Water Lines - General Notes. These notes to appear on all water line plans:

1. Concrete blocking (3000 psi) to be placed at all bends or as required.
2. Standard depth of cover to be 42 inches except at valve or hydrant locations or other special situations. Cover is based on elevation below edge or pavement or as indicated on the plans.
3. Provide poured in place concrete pads (24" x 24" x 6") at all valve boxes.
4. Extensions for valve boxes, when required, are to be valve boxes.

5. All pavement cuts, concrete or asphalt, are to be replaced according to the standard details or as required by the North Carolina Department of Transportation.

6. Pavement cuts are to be replaced immediately after backfilling of initial cut either with permanent replacement or a temporary replacement of 10" of base.

7. Repairs to main breaks:

    a. Solid sleeves to be used for connecting spigot ends shall be of the long body type.

    b. All repairs shall be inspected by the Town before backfilling.

8. In any instance where it will be necessary to have the water shut off on existing mains in order to make a tie-in, the shut off must be done by Town forces, and scheduled 48 hours in advance.

9. When a water main crosses an existing sewer main, the contractor is to replace the sewer pipe spanning the ditch with ductile pipe when the following conditions occur:

    a. Anytime a water main is installed under a sewer main.

    b. When a water main is over a sewer main and the vertical distance between the two mains is 18" or less.

10. Water mains shall be installed with a minimum of 10' horizontal separation from sewer lines, unless otherwise allowed by the State. Where this is not possible, as determined by the State, both the water line and sewer line shall be ductile iron pipe.

11. Water lines shall be disinfected and hydrostatically tested in accordance with all State and Town requirements.

B.5.4b Sanitary Sewer Design Criteria

1. Sanitary sewer plans and specifications shall be sealed by a Professional Engineer, licensed to practice in North Carolina.

2. Minimum manhole depth shall be 4 feet.

3. Minimum pipe size shall be 8" for mains and 4" for laterals.

4. Minimum slope shall be 0.5%. Maximum slope shall be that which limits the velocity to 10 fps.

5. Minimum velocity shall be 2 fps, for pipe flowing half full.

6. Minimum cover shall be 3.0 feet, unless ductile iron pipe is used.

7. Maximum cover shall be 18 feet, unless ductile iron pipe is used.

8. Manholes shall extend 2 feet above the 100-year flood elevation, 2 feet above the ground in unmaintained areas outside of street right-of-ways, or be sealed cover and vented 2 feet above the

100-year flood elevation. If the 100-year flood elevation cannot be readily established, the Town Engineer shall establish the elevations to which the manhole rims or stack shall be extended.

9. Horizontal and vertical alignment between manholes shall be straight.

10. Provide a minimum 0.2' drop through a manhole.

11. Maximum distance between manholes shall be 400 feet.

12. Use a drop manhole where the difference between incoming and outgoing pipe inverts exceeds 30-inches.Drop manholes shall be avoided if feasible.

13. Provide wye with lateral to the property line per standard detail.

14. Separate water lines 10 feet horizontal distance from sewer lines (existing or proposed) or keep water line 18 inches clear above sewer line. Where 18 inches clear vertically cannot be maintained above the sewer line, both lines shall be mechanical joint ductile iron a minimum of 10 feet on either side of the crossing. Center the crossing at the center of the pipe, both lines.

15. Sewer lines shall have a minimum 30' permanent easement (15' each side of center line) in the Town's name. A 50' construction easement (25' each side of center line, unless directed otherwise) shall be provided. Where utility lines are parallel and 10’ apart, the 15’ each side of center line may be reduced to 10’ and maintain the total 30’ permanent easement width.

Sanitary Sewer Plans Checklist. Sanitary sewer plans shall contain the following minimum information:

1. Plan and profile on 24" x 36" page.

2. Vertical USGS elevation scale on both sides of profile and station numbers along bottom of profile.

3. North arrow, all sheets.

4. Plan and profile both run left to right.

5. Centerline intersections of line crossings with sewer noted on profile.

6. Street names above or below corresponding profile.

7. Identify location of drop manholes in both plan and profile.

8. Invert elevations of all proposed and all existing pipes and pipe sizes entering and leaving all manholes to 0.01' on profile.

9. Rim elevation and vent elevation to 0.1' on profile; existing and proposed grades.

10. Pipe grade to 0.01% and size and type of pipe between manholes.

11. Size and type of existing pipe and direction of flow between each manhole on plan.

12. Station numbers and designation of "Existing" or "New" and manhole number on each manhole on plan and profile.

13. Indication of "identical" manholes where profile is broken.

14. Location and size of all existing and proposed street and sewer rights-of-way.

15. Existing pavement on plan, indicate width, and any portion to be cut.

16. Where a line is to be bored indicate location and length of casing and type of pipe on plan and profile.

17. All existing and proposed underground utilities in the area shall be dotted in.

18. Where ductile iron is to be used, indicate limits on plan and profile. Show shaded on profile.

19. Use ductile iron where storm drain and sewer have less than 1 foot vertical clearance.

20. On aerial crossings, use concrete piers at l8' intervals (unless an alternate design is approved by the Town Engineer), indicate on plans and profile, include details of design for the piers and anchorage.

21. Total distance between existing manholes or proposed manholes on the plan and the bearing if the line is not within the street right of way.

22. All lot lines.

23. All street names on plan.

24. Flood plain elevation in all flood plain areas.

25. Creek flow line.

26. All Railroad crossings must be accompanied by a separate encroachment map showing plan and profile and all other information required by the railroad in accordance with their standards.

27. Registered Engineer's seal and signature.

28. Vicinity map showing the location of lines and a visual index of plan sheets.

29. Date and purpose of issue.

30. Type of bedding to be used shall be shown or noted.

B.6 Stormwater Management

B.6.1 Materials

Catch Basins and Curb Inlet. Catch basins shall be constructed from clay or shale brick, concrete brick or solid concrete. Precast units conforming to ASTM C-478 may be used provided no reinforcing will be disturbed, i.e. cut or exposed or damaged. Mortar and construction shall be as described in Part 3, Article 3.05 of these standards.

Catch basins deeper than 3'-6" shall be provided with steps. Steps shall be copolymer polyropoyleme plastic, reinforced with ½" grade 60 reinforcement.

Catch basins shall be installed on a minimum of 8 inches of compacted stone bedding.

Catch basin bottoms shall be poured in place 6" thick Class A concrete with block or brick catch basins. Generally, inverts will be poured in place to prevent ponding in the bottom of the basin. However, precast bottoms may be used with precast riser sections.

Frames, Grates, Hoods and Covers. All material shall be cast iron conforming to ASTM A48 (latest edition), Class 30.

Reinforced Concrete Pipe. Reinforced concrete pipe shall conform to ASTM C-76 - latest revision. The pipe class shall be selected for expected conditions. Pipe shall be of sufficient strength to support a minimum of H-20 loading in the street right-of-way and a minimum H-10 loading outside of the street right-of-way. Minimum Class III.

Minimum laying length is 4'.

Portland cement shall conform to ASTM C-150, Type II.

Pipes shall have bell and spigot ends with butyl mastic joint material. Pipe shall be installed in accordance with all manufacturers' recommendations.

All pipe shall be aged at the manufacturing plant for a minimum of 14 days before delivery.

All storm drainage pipe in street or public rights-of-way shall be reinforced concrete pipe.

Minimum size for these pipes is 15 inches.

Steel Corrugated Metal Pipe. Corrugated steel pipe will not be permitted within streets or public rights-or way or where it will be in public maintained locations or tie into public maintained structures.

Aluminum Corrugated Alloy Pipe. Aluminum corrugated alloy pipe shall meet AASHTO M-196, M-197 and M-219, latest revision, as applicable to the application, except Type IA pipe will not be permitted.

Aluminum pipe shall be a minimum of 0.075 inches decimal thickness (14 gauge equivalent). Pipe shall be designed for H-20 loading in the street right-of-way.

Installation conditions, as recommended by the manufacturer, shall be met so as to minimize corrosion.

Pipes shall be joined with coupling bands as recommended by the manufacturer. Couplings shall provide a positive union of adjacent pipe sections while effectively preventing displacement of pipe along its axis and lateral displacement at the joint.

Aluminum corrugated pipe may be used for outside street or public rights-of-way, in drainage or utility easements.

High Density Polyethylene Pipe. High Density Polyethylene Pipe (HDPE) may be used outside street or public rights-of-way, in drainage or utility easements.

Drainage Pipe-Joints. All drainage pipes shall have watertight joints.

B.6.2 Construction Methods

Installation. Storm drainage shall be installed in accordance with the Standard Details and design criteria.

B.6.3 Tests and Inspections

Backfill. The Town reserves the right to have any questionable backfill tested by an independent testing laboratory, approved by the Town, at the developer's/owner's expense.

Flushing. At completion of work, lines shall be thoroughly cleaned by flushing with water to remove all dirt and debris. An approved source of non-potable water may be used to flush storm drainage lines, however, a method to keep silt and debris from entering the pipe must be demonstrated and approved.

Visual Inspection. Lines shall be inspected by visual inspection using appropriate light source, checking for misalignment or blockage. Any pipe not laid true to line and grade shall be repaired. Any blockage or obstructions shall be cleared.

The Town reserves the right to TV lines to detect sources of leakage, damage or improper construction.

B.6.3 Design Criteria and Policies

1. All storm drainage shall be designed and sealed by a Professional Engineer licensed to practice in North Carolina and qualified in storm drain design.

2. The following definitions and design shall be used:

    a. Storm Sewer Collector - Storm sewers which run parallel to the road which have as a primary purpose, carrying runoff from adjacent lots and roads to the low point in the system. These sewers shall be designed to carry a 10-year storm, flowing full.

    b. Culvert - A short run of pipe under a road or driveway which has as a primary purpose to pass water from an open channel to an open channel. These pipes shall be designed for a 10-year storm under driveways and a 25-year storm under Town streets or roads. For NCDOT streets or roads use latest NCDOT requirements.

    c. The classification of pipes into one of the above categories and its subsequent design storm is subject to the discretion of the Town Engineer.

3. For drainage areas less than 300 acres, stormwater quantities will be determined by the Rational Method, Q=CIA, where:

    Q = discharge, cubic feet per second
    C = runoff coefficient
    I = intensity of rainfall, inches per hour,
    A = drainage area, acres

    For drainage areas greater than 300 acres, the method for determining stormwater quantities must be approved by the Town Engineer.

4. The runoff coefficient "C", for site drainage may be based upon the weighted average of the proposed ground cover or land use - zoning. The runoff coefficient "C", for off site drainage shall be based upon land use - zoning.

5. Pipe systems and open channels shall generally be designed using the Manning formula. If backwater conditions occur, the design method must be approved by the Town Engineer.

6. Culverts shall be appropriately sized for each condition of inlet control and outlet control. Headwater depth shall be based upon the flood elevation controlling. In no case shall headwater depth increase ponding elevation on adjacent properties. Headwater to depth ratio shall not exceed 1.2 unless approved by the Town Engineer

7. Minimum pipe diameter is 15" within any right-of-way or drainage easement.

8. Minimum velocity is 2.5 feet per second, for pipe flowing just full. Maximum velocity for RCP is 20 feet per second.

9. Headwalls or flared end sections will be used at the influent and effluent of all pipe systems. Flared end sections are preferred. Outlet protection shall be provided.

10. Catch basins in roadways shall be spaced to collect runoff from a rainfall intensity of 4 inches per hour with a spread of no more than half a through lane. When the typical section includes a parking lane or full shoulder no encroachment into the travel lane is allowed.

    a. In Residential Subdivisions, street catch basins shall be located such that the gutter capacity will not be exceeded by the runoff from the fully developed drainage area. Depth in gutter shall not exceed 5-inches for standard curb and gutter or 3-inches for valley gutter.
    b. In Commercial and Industrial Subdivisions, street catch basins may be located assuming either the developed or the non-developed condition; however, if design is for the non-developed condition, drainage laterals must be stubbed out to private property for each lot which drains toward the street.
    c. Less spread may be required on major and minor thoroughfares at the discretion of the Town Engineer.

11. Maximum distance between catch basins is 300 feet unless otherwise approved by the Town Engineer.

12. Drop inlets shall be sized to collect the 10-year design flow with no more head on the grate than is suitable for the situation. (Show limits of maximum ponding on the plans). In no case shall headwater depth exceed .4 feet in traffic areas or .8 feet in landscaped areas, unless specifically approved by the Town Engineer.

13. Storm drainage structures over 3'-6" deep shall have steps.

14. All turns and changes in pipe size shall be accommodated by an accessible structure (i.e., catch basin or manhole).

15. Minimum cover, except at influent and effluent flared end sections, is 2'-0". Exceptions may be granted at the option of the Town Engineer, if adequate treatment is provided.

16. All ditches and swales shall be indicated with grades, cross section(s) and liner material (grass, stone, concrete, etc.) shown.

17. Where possible, pipes shall be located in the street right-of-way. All pipes and ditches which are not in the street right-of-way, but carry off site drainage through the property must have a storm drainage easement to guarantee passage of runoff. The Town will not maintain these drainage easements. Maintenance is the responsibility of the respective property owners or homeowners association. Minimum easement widths for pipes shall be based on the pipe size as follows:

Pipe Size	Easement Width
15" - 36"	20'
42" - 60"	30'
Greater than 60"	As Directed

Greater widths based on depths may be required as directed by the Town Engineer.

Minimum easement widths for ditches shall be based on the 10-year runoff as follows:

Runoff (CFS)	Easement Width
Q less than 10	10'
Q= 10 to 30	20'
Q= 30 to 100	30'
Q greater than 100	As Directed

18. No structures may be built over drainage easements, drainage pipes, creeks and/or apparent drainage paths, unless an engineering plan has been approved showing the relocated drainage path and a recorded drainage easement.

19. No water shall be allowed to discharge in a concentrated manner across a sidewalk or driveway.

20. Diversion of natural, pre-development drainage is prohibited unless specifically approved by the Town and other controlling agencies.

21. All sites must provide for positive drainage.

22. All drainage systems must be adequately sized to accept runoff from up-stream properties in their most likely developed condition, as based upon Town Zoning.

Plan and Calculation Checklist. Storm drainage plans and calculations should, at a minimum, show the following:

Plans

1. Area drained.

2. Off site areas and their zoning.

3. Existing and proposed contours.

4. Important spot elevations.

5. Delineated areas draining to each inlet, swale, etc. and area of maximum ponding on drop inlets and culverts.

6. Drainage patterns on and off site before and after development.

7. Off site swales, pipes and structures adjacent to the site.

8. Pipe size, length, slope and material.

9. Show swales and ditches, indicate grade, cross section(s) and liner material.

10. Invert elevations in and out on all pipes.

11. Catch basin rim elevations.

12. Riprap width, depth, length and size.

13. Plan and profile sheets must be at an acceptable engineering scale.

Calculations - Calculations should be presented in a neat, accurate and organized manner.

1. Drainage area - individual and cumulative.

2. Runoff coefficients.

3. Storm intensity.

4. Runoff flow.

5. Pipe slope.

6. Manning coefficient of roughness.

7. Pipe diameter (culvert size).

8. Maximum flow capacity.

9. Velocity at design storm or maximum probable velocity.

10. Inlet control, outlet control conditions and maximum headwater depth.

B.7 Street Trees

General. Trees shall be planted in new developments as required by this Ordinance.

Trees shall be installed as the last construction step, or a performance guarantee submitted for their installation.

Existing Trees. Existing trees may be preserved, provided the trees:

1. Are shown on the preliminary plat;
2. are flagged in the field and protected during construction;

3. are of a species identified by the Zoning Ordinance;
4. do not impose a drainage problem;
5. are within 5 feet of the right-of-way line (either side);
6. are not likely to be damaged by construction; and
7. are not likely to interfere with installation of proposed utilities.

Planting Season. Trees should be planted from November 1 through March 15.

Planting. Trees shall be planted as described in Chapter 7 of the Town's UDO. Spacing shall be adjusted to avoid obstacles and keep roads sight triangles clear.

Planting shall be in accordance with North Carolina Department of Transportation's "Guidelines for Planting within Highway Right-of-Way" and American Standard for Nursery Stock ANSI Z60.1. Professional nursery guidelines shall be obtained for individual species requirements.

Trees shall conform to the American Standard for nursery stock for proper relations of height, caliper and root ball diameter. Trees shall, at a minimum, conform to the following:

Mature Tree Size	Average Mature Height	Minimum Planting Height
Large	45'-up	8'-10'
Medium	35'-45'	6'- 8'
Small	10'-30'	4'- 6'

Planting Around Obstacles. Plantings around obstacles must be approved by the Town. Generally, the following spacings are recommended:

Obstacle	Minimum Clearance
Water Meter	5'
Fire Hydrant	15'
Utility Poles	20'

Trees directly under overhead power lines shall be small trees with a mature height of less than 25'.

Trees planted within 10' of underground utilities shall not be of the invasive type, as identified in the recommended tree list.

Trees shall not be planted in the sight triangles of intersections or the sight triangles of driveways.

Root Barriers. In an effort to protect both trees and underground utilities, the Town encourages the use of root barriers where conflicts are apparent. Many underground utilities have a life-expectancy of approximately 30 years. Mature trees can be severely damaged or even killed if vital roots are cut when replacement lines are installed. The purpose of root barriers is to prevent vital roots from growing towards utility lines.

Trees planted in the street right-of-way, and trees planted near the right-of-way to satisfy UDO requirements, shall be protected by a root barrier.

Tree Protection Barriers. Tree protection barriers shall be erected around all existing trees to be preserved to meet the Town's requirements for street trees or other trees required by Town's UDO.

Tree Selection. Deciduous trees are preferred in most cases.

Trees shall be of the approved species listed in Chapter 7 of the Town's UDO.

Guarantee. Trees shall be guaranteed for one year from the issuance of the certificate of occupancy. Trees which die or are destroyed shall be replaced as soon as possible within a planting season.

Appendix B.8 Diagrams

STANDARD NUMBER	TITLE
R-1	Cross Section Standard (1)
R-2	Cross Section Standard (2)
R-3	Cross Section Standard (3)
R-4	Service Alley Section
R-5	Right Shoulder Section
R-6	Left Shoulder Section
R-7	Cul-de-Sac Commercial
R-8	Cul-de-Sac Residential
R-9	Curb and Gutter
R-10	Divided Entrance
R-11	Driveway Ramps for Vertical Curb & Gutter
R-12	Sidewalk
R-13	Sidewalk with Expansion Joints
R-14	Wheelchair Ramp
W-1	Thrust Blocks
W-2	Thrust Collar
W-3	Fire Hydrant
W-4	Valve Box Installation
W-5	Dead End Lines
W-6	Air Release Valve
W-7	¾" and 1" Meter Connection
SS-1	Precast Manhole
SS-2	Precast MH w/Inside Drop
SS-3	Precast MH w/Outside Drop
SS-4	Manhole Vent
SS-5	Tap and Stub-Out
SS-6	Air Release Manhole
SD-1	Catch Basin at Intersections
SD-2	Catch Basin in Valley Gutter
SD-3	Trench Drains across Driveways
SD-4	Sidewalk Flume
SD-5	Flared End Section
SD-6	Typical Subsurface Drain

Drop Inlets, Catch Basins, Slab Type Catch Basins, Manholes, Headwalls and other Drainage Structures, Frames, Grates & Hoods and Manhole Rings & Covers shall meet NCDOT requirements. Precast concrete structures will be considered provided

reinforcing in knockout panel type boxes is not damaged or removed and proper connection to the structure can be made. Details for all structures to be used in projects shall be included in the project drawings. Reference to these or NCDOT standard drawings shall not be considered adequate for construction drawings.

P-1	Type 1 Bedding
P-2	Type II Bedding
P-3	Type III Bedding
P-4	Pavement Repair
P-5	Pipe Support Assembly

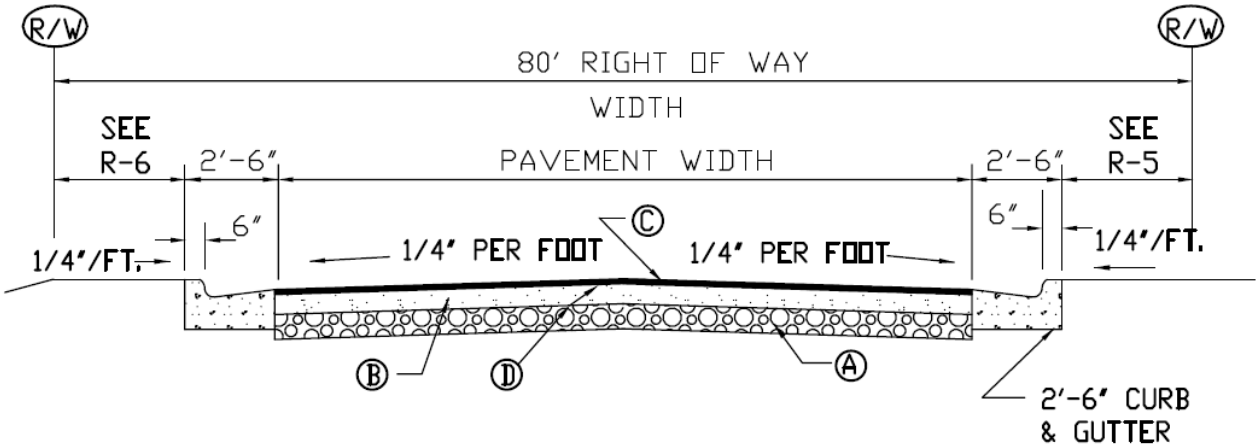

TYPICAL CROSS SECTION
MAJOR THOROUGHFARES & MINOR THOROUGHFARES

Classification of street is to be determined by the Town or NCDOT. NCDOT may have additional requirements for NCDOT maintained roads. Thoroughfares to have 5' sidewalk on both sides of road. Minimum radius with intersecting streets to be determined by the Town or NCDOT.

Minimum Pavement Schedule

A. 12" compacted aggregate base course or 6" bituminous concrete base course type B-25.0C.

B. 3" Bituminous concrete intermediate course type I-19.0C, placed immediately upon final preparation of ABC stone base.

C. 2" bituminous concrete surface course. Type S-9.5B, placed in one lift.

D. Tack coat shall be applied between asphalt plant mix courses. Existing surface shall be cleaned prior to tack coat application.

Street Type	Minimum Right of Way Width	Minimum Pavement Width
Major Thoroughfare	80'	48' (60' if center turn lane)
Minor Thoroughfare	80'	24' (36' if center turn lane)

Troutman, NC Standard Detail	Date: November 2008
Roads	Scale: None
CROSS SECTION STANDARD 1	Standard R-1

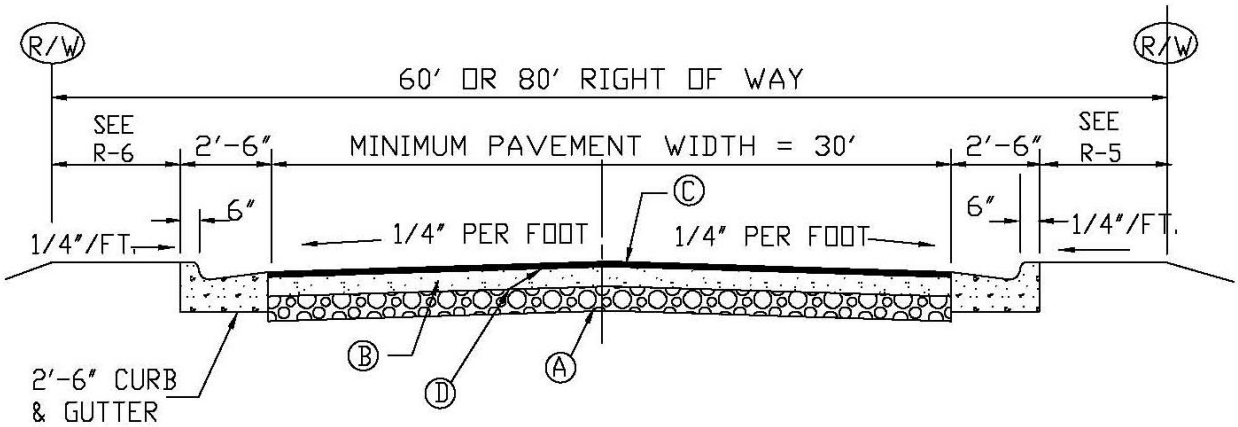

TYPICAL CROSS SECTION
COMMERCIAL AND INDUSTRIAL STREETS

COMMERCIAL STREETS TO HAVE 5' SIDEWALK ON BOTH SIDES OF STREET. INDUSTRIAL STREETS MAY HAVE TO HAVE SIDEWALKS (MIN. 5' WIDE) ON ONE OR BOTH SIDES OF STREET AS DETERMINED BY THE TRC. MINIMUM RADIUS WITH INTERSECTING STREETS TO BE DETERMINED BY THE TOWN OR NCDOT.

PAVEMENT SCHEDULE

A 10" COMPACTED AGGREGATE BASE COURSE OR 5" BITUMINOUS CONCRETE BASE COURSE TYPE B-25.0C.

B 3" BITUMINOUS CONCRETE INTERMEDIATE COURSE TYPE I-19.0C, PLACED IMMEDIATELY UPON FINAL PREPARATION OF ABC STONE BASE.

C 2" BITUMINOUS CONCRETE SURFACE COURSE. TYPE S-9.5B, PLACED IN ONE LIFT.

D TACK COAT SHALL BE APPPLIED BETWEEN ASPHALT PLANT MIX COURSES. EXISTING SURFACE SHALL BE CLEANED PRIOR TO TACK COAT APPLICATION.

STREET TYPE	MIN. R/W WIDTH	MIN. PAVEMENT WIDTH
STANDARD	60'	30'
COLLECTOR	80'	36', 48', OR 60' (BASED ON NUMBER OF LANES REQUIRED)

REVISED MAY 5, 2010

TROUTMAN, NC STANDARD DETAIL	DATE: NOVEMBER 2008
ROADS	SCALE: NONE
CROSS SECTION STANDARD 2	STANDARD R-2

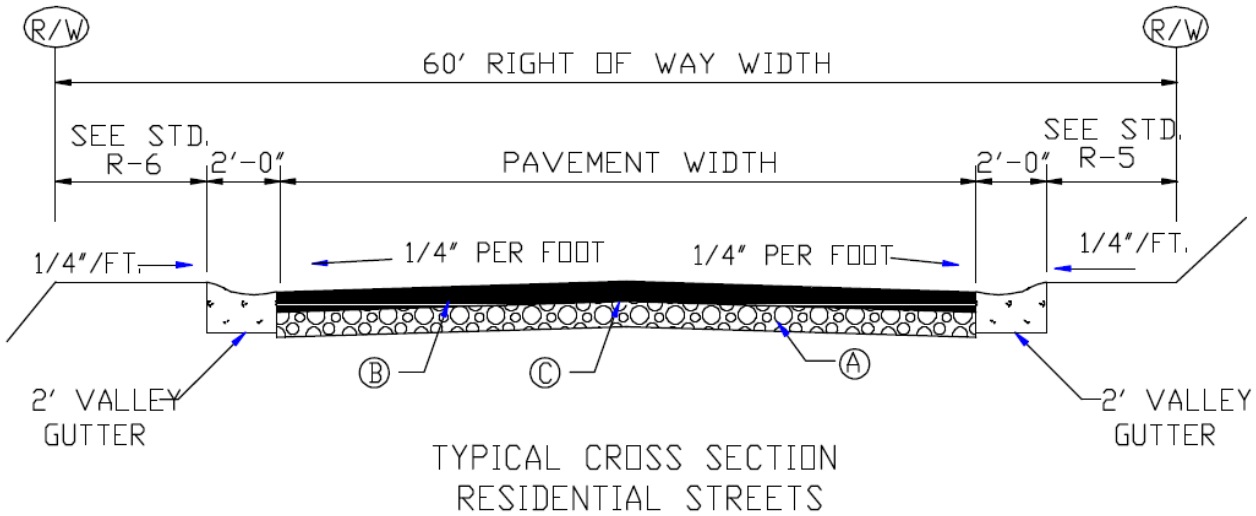

Minimum Pavement Schedule

A. 8" compacted aggregate base course or 4" bituminous concrete base course, type B-25.0C.

B. 3" Bituminous concrete surface course, type S-9.5B, with 1 ½" placed immediately after preparation of base and final 1 ½" placed after 90% development occupancy.

C. Tack coat if type B-25.0C base course is used. Clean base course prior to tack coat application.

Notes:

1. Use 2'-0" valley gutter

2. Type of street is determined by the Town.

3. For local commercial and industrial streets – See R-2.

4. Residential collector streets to have sidewalk on both sides of street. Local residential streets to have sidewalk on one (waterline side) side of street. Sidewalks to be minimum 5' wide.

5. Intersecting streets shall have a minimum radius of 20' at the back of curb.

6. If on street parking is allowed, the Town may require an additional pavement width.

Minimum Width of Pavement

Residential Collector Street	30'
Local Residential Street	24'

Troutman, NC Standard Detail	Date: November 2008
Roads **CROSS SECTION STANDARD 3**	Scale: None Standard R-3

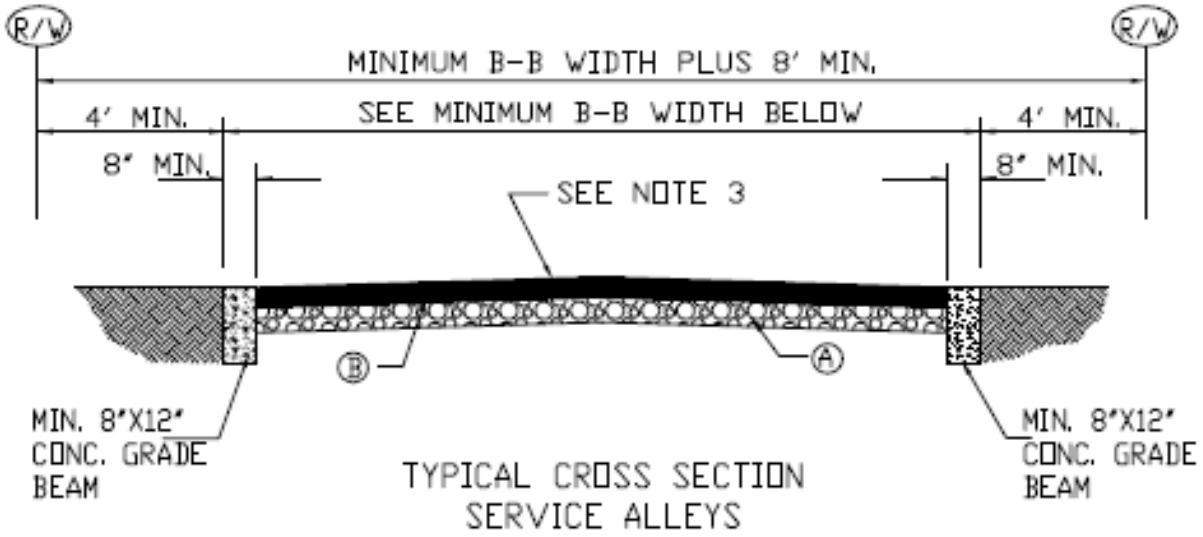

Minimum Pavement Schedule

A. 6" compacted aggregate base course

B. 1 ½" Bituminous concrete surface course, type S-9.5B to be placed immediately upon final preparation of base.

Notes:

1. Concrete grade beams to have expansion and contraction joint spacings the same as concrete curb and gutter

2. Intersections with streets or other alleys shall have a minimum radius of 15' at the back of the concrete grade beam.

3. Roadway may be constructed flat, with a crown or with a valley as long as runoff is directed to the storm drainage system. Cross slope for crown or valley section shall be ¼"/foot.

Minimum Width Back to back of Grade Beam

One Way Traffic	12'
Two Way Traffic	20'

Troutman, NC Standard Detail	Date: November 2008
Roads	Scale: None
SERVICE ALLEY SECTION	Standard R-4

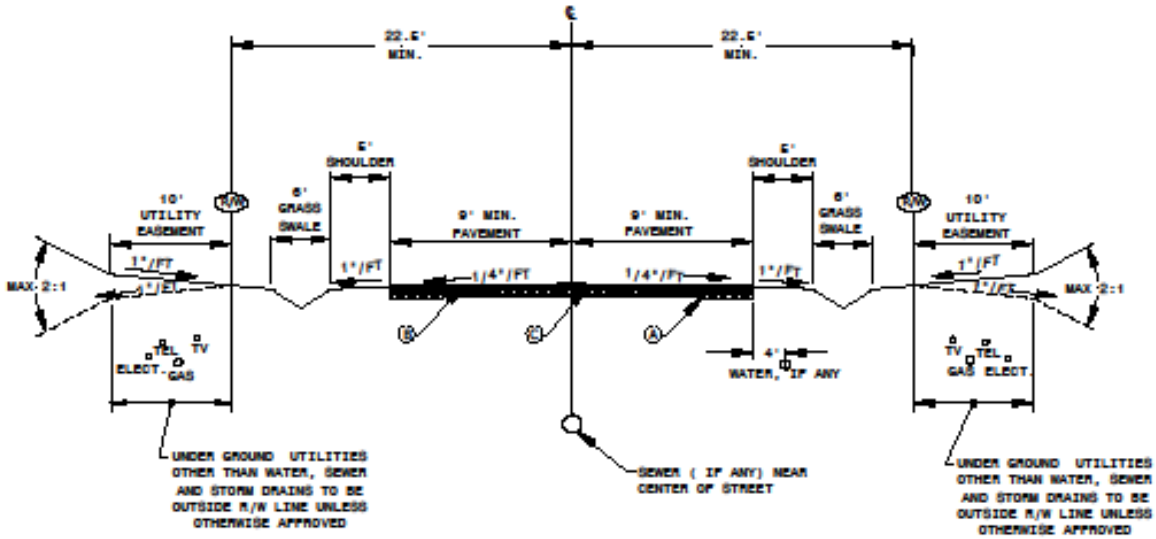

MINIMUM PAVEMENT SCHEDULE

(A) 8" COMPACTED AGGREGATE BASE COURSE OR 4" BITUMINOUS CONCRETE BASE COURSE, TYPE B-25.0C.

(B) 2" BITUMINOUS CONCRETE SURFACE COURSE, TYPE S-9.5B.

(C) TACK COAT IF TYPE B-25.0C BASE COURSE IS USED. CLEAN BASE COURSE PRIOR TO TACK COAT APPLICATION.

NOTE
IF ON STREET PARKING IS ALLOWED THE TOWN MAY REQUIRE ADDITIONAL PAVEMENT WIDTH.

PRIVATE RURAL RESIDENTIAL STREET
(ONLY ALLOWED IN RURAL PRESERVATION DISTRICT AND SUBJECT TO OTHER CONDITIONS OF THIS ORDINANCE)

TROUTMAN, NC STANDARD DETAIL	DATE: AUGUST 17, 2011
ROADS PRIVATE RURAL RESIDENTIAL	SCALE: NONE STANDARD

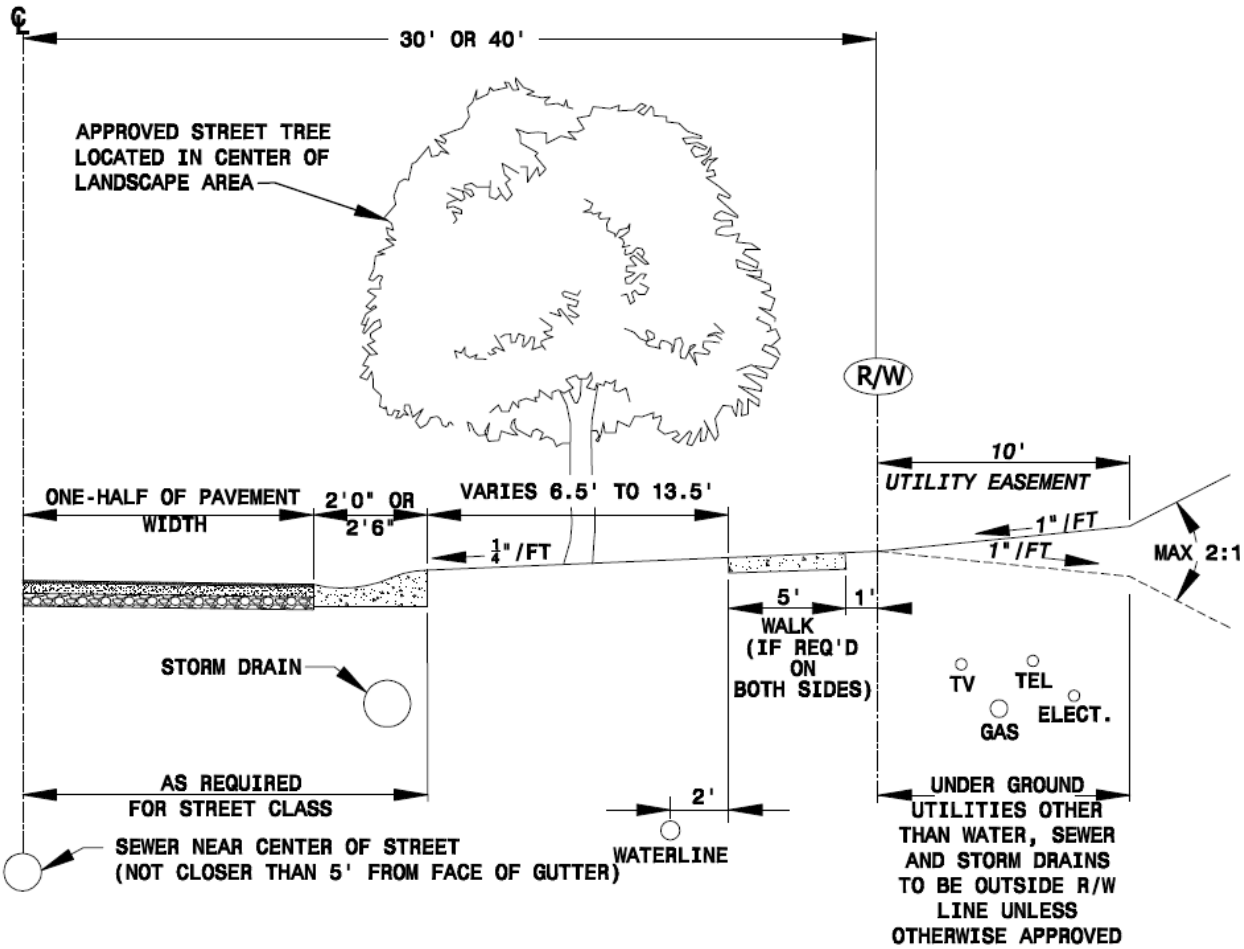

RIGHT ROAD SHOULDER SECTION
SHOWING UNDERGROUND UTILITIES

Notes:

1. Residential collector streets and all commercial streets to have sidewalks on both sides of street. Local residential streets to have sidewalk on one (opposite from waterline side) side of street. Industrial streets to be determined by Town.

2. For thoroughfares and commercial/industrial streets, submit proposed typical section to Town and NCDOT for individual review and approval.

3. Unless otherwise stated in this Ordinance, street trees shall be planted at a rate of 5 per 200 feet, per side.

Troutman, NC Standard Detail	Date: November 2008
Roads	Scale: None
RIGHT SHOULDER SECTION	Standard R-5

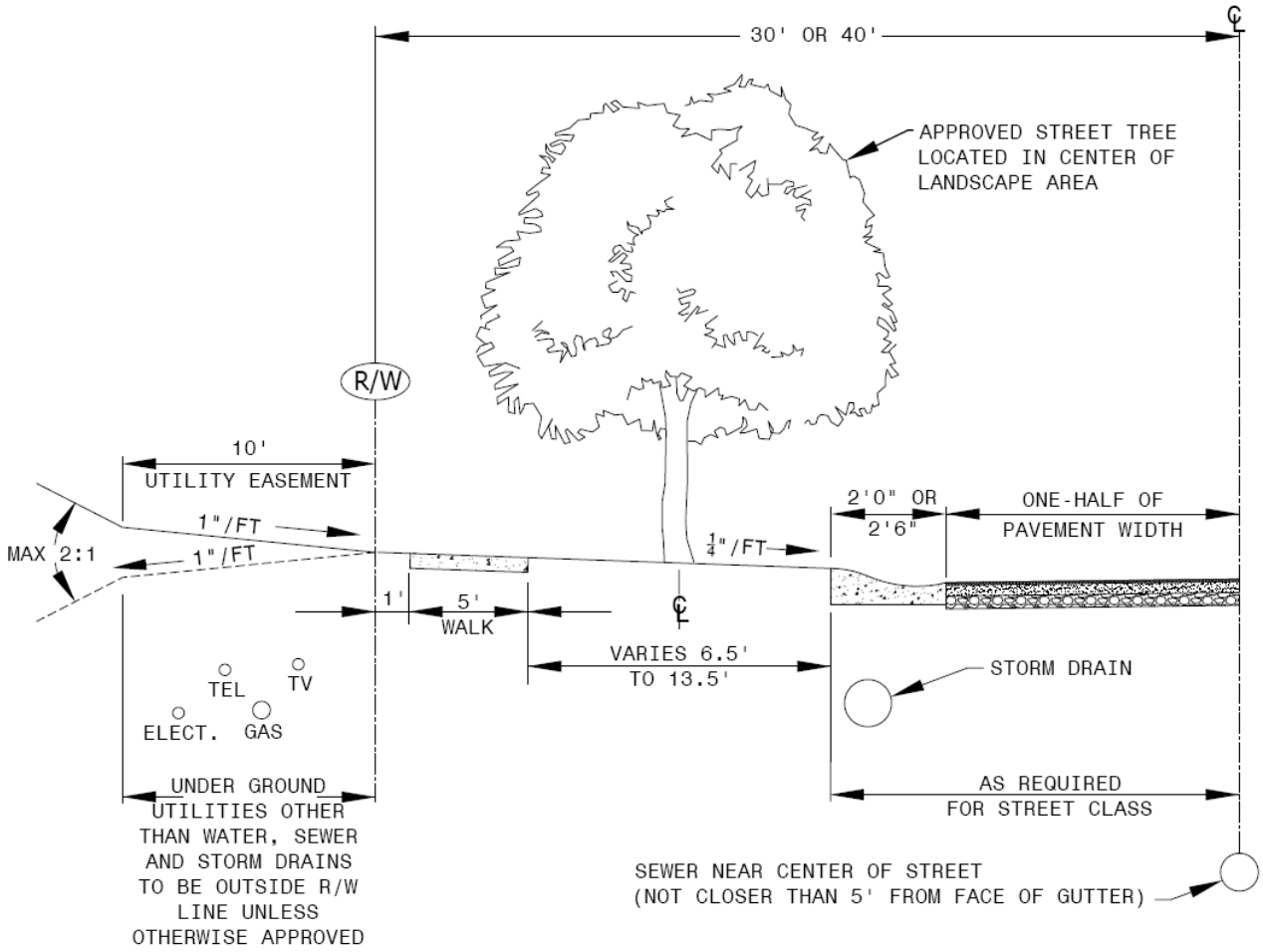

LEFT ROAD SHOULDER SECTION
SHOWING UNDERGROUND UTILITIES

Notes:

1. Residential collector streets and all commercial streets to have sidewalks on both sides of street. Local residential streets to have sidewalk on one (opposite from waterline side) side of street. Industrial streets to be determined by Town.

2. For thoroughfares and commercial/industrial streets, submit proposed typical section to Town and NCDOT for individual review and approval.

3. Unless otherwise stated in this Ordinance, street trees shall be planted at a rate of 5 per 200 feet, per side.

Troutman, NC Standard Detail	Date: November 2008
Roads **LEFT SHOULDER SECTION**	Scale: None
	Standard R-6

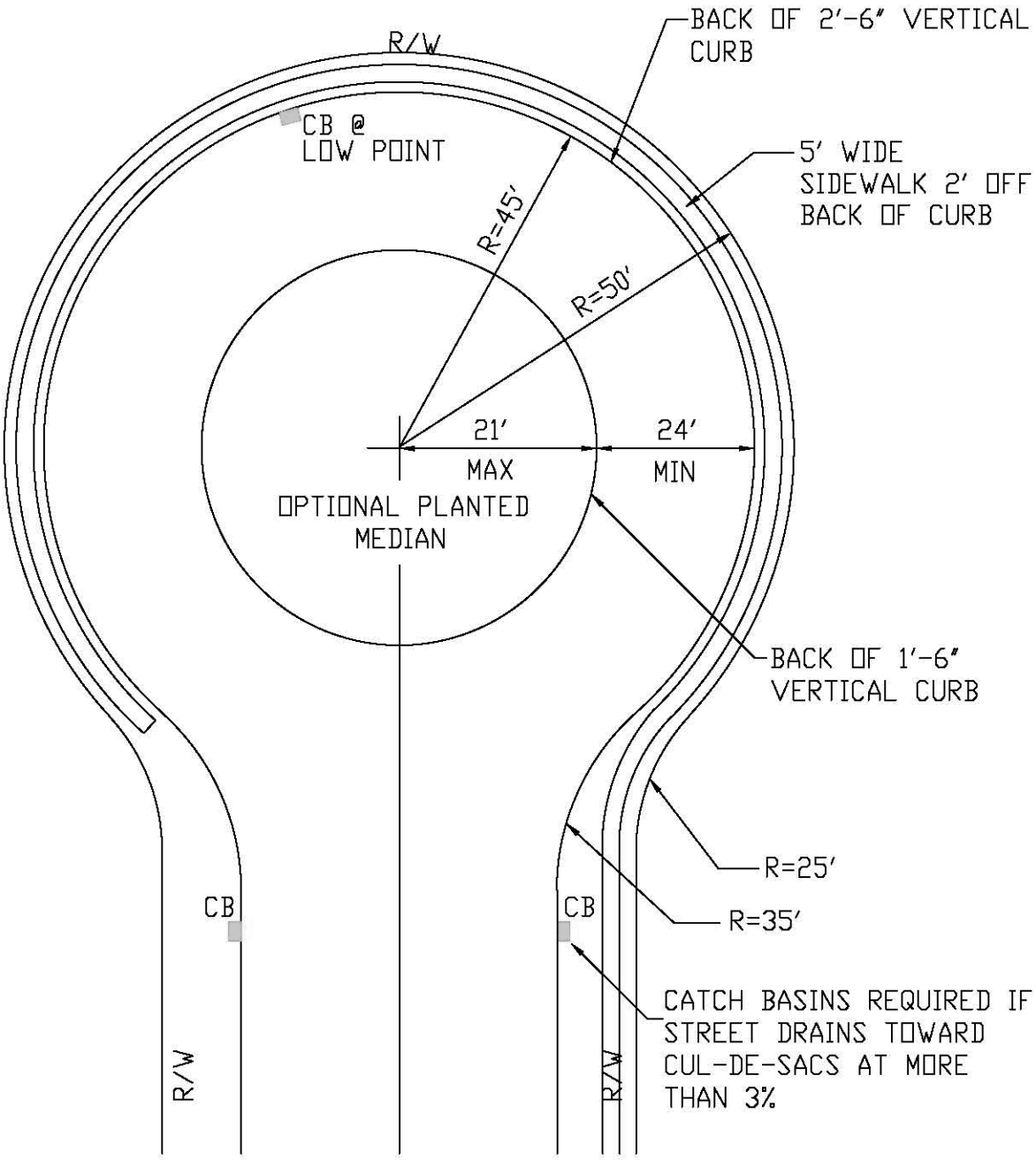

CUL-DE-SACS
COMMERCIAL/INDUSTRIAL DEAD END STREETS

REVISED MAY 5, 2010

TROUTMAN, NC STANDARD DETAIL	DATE: APRIL 2006
ROADS	SCALE: NONE
COMMERCIAL CUL-DE-SAC	STANDARD R-7

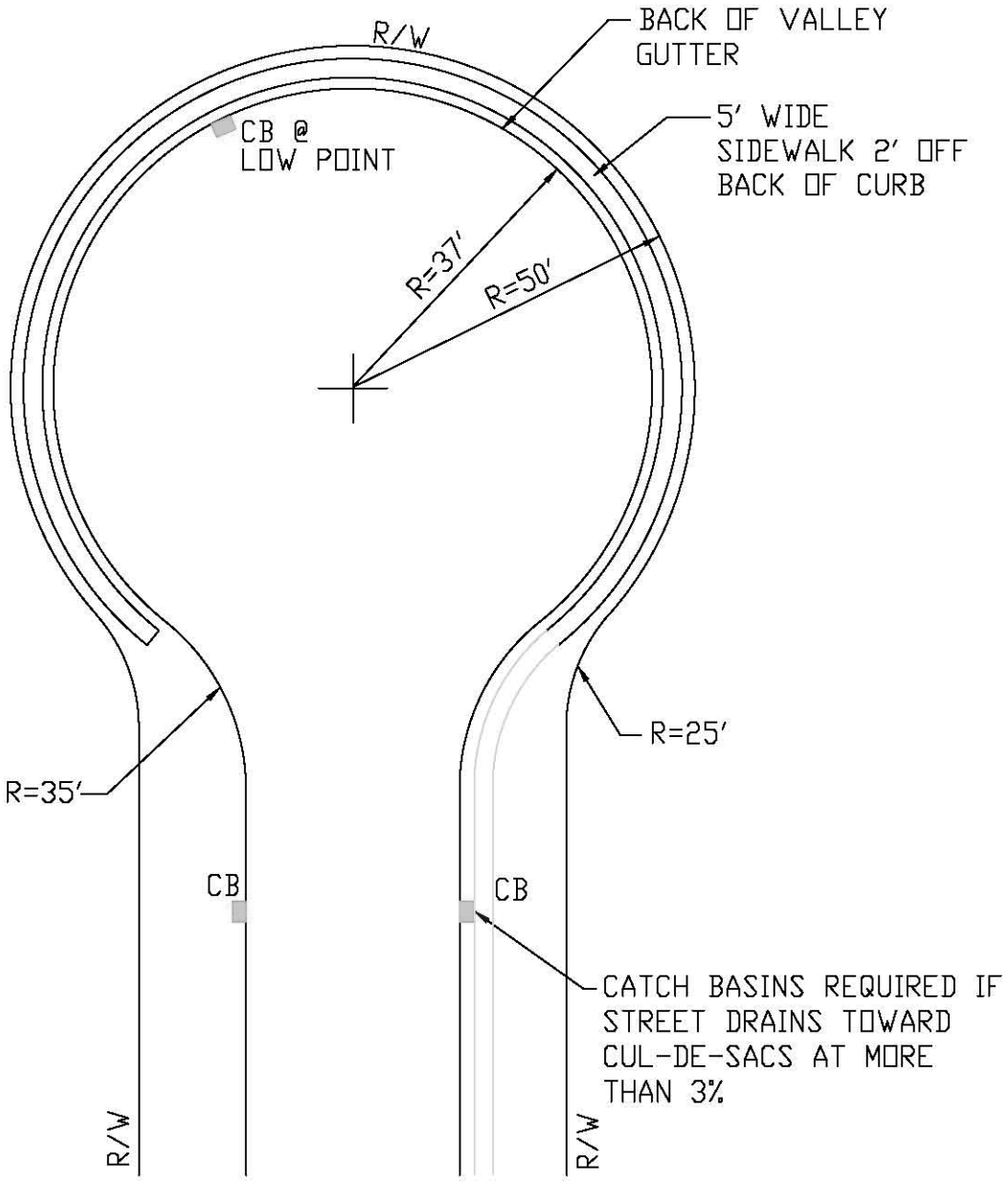

CUL-DE-SACS
RESIDENTIAL DEAD END STREETS

REVISED MAY 5, 2010

TROUTMAN, NC STANDARD DETAIL	DATE: APRIL 2006
ROADS	SCALE: NONE
RESIDENTIAL CUL-DE-SAC	STANDARD R-8

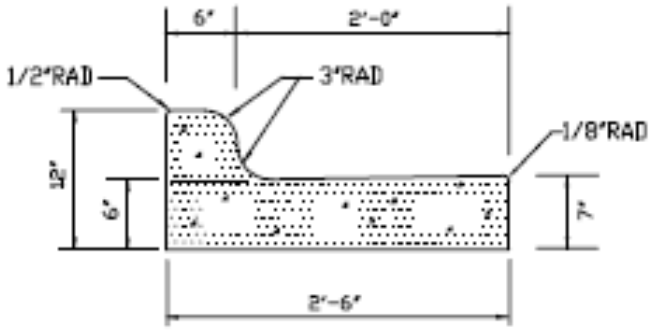

2'-6" CURB AND GUTTER

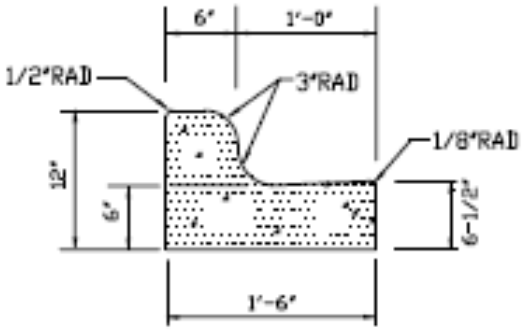

1'-6" CURB AND GUTTER

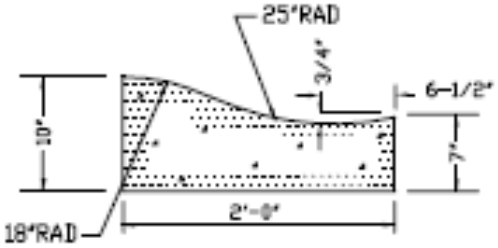

2'-0" VALLEY GUTTER

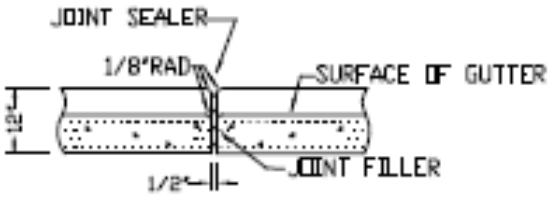

TRANSVERSE EXPANSION JOINT IN CURB AND GUTTER

General Notes:

1. Contraction joints shall be spaced at 10' intervals, except that a 15' spacing may be used when a machine is used or when satisfactory support for the face can be obtained without the use of templates at 10' intervals.

2. Joint spacing shall be provided to prevent uncontrolled cracking.

3. Contacting joints may be installed with the use of templates or formed by other NCDOT approved methods. Non-template formed joints shall be a minimum depth of 1 ½".

4. All contraction joints shall be filled with joint sealers.

5. Expansion joints shall be spaced at 90' intervals and adjacent to all rigid objects.

6. Expansion and construction joints shall be filled with joint filler and sealer.

Troutman, NC Standard Detail	Date: April 2006
Roads	Scale: None
CURB AND GUTTER	Standard R-9

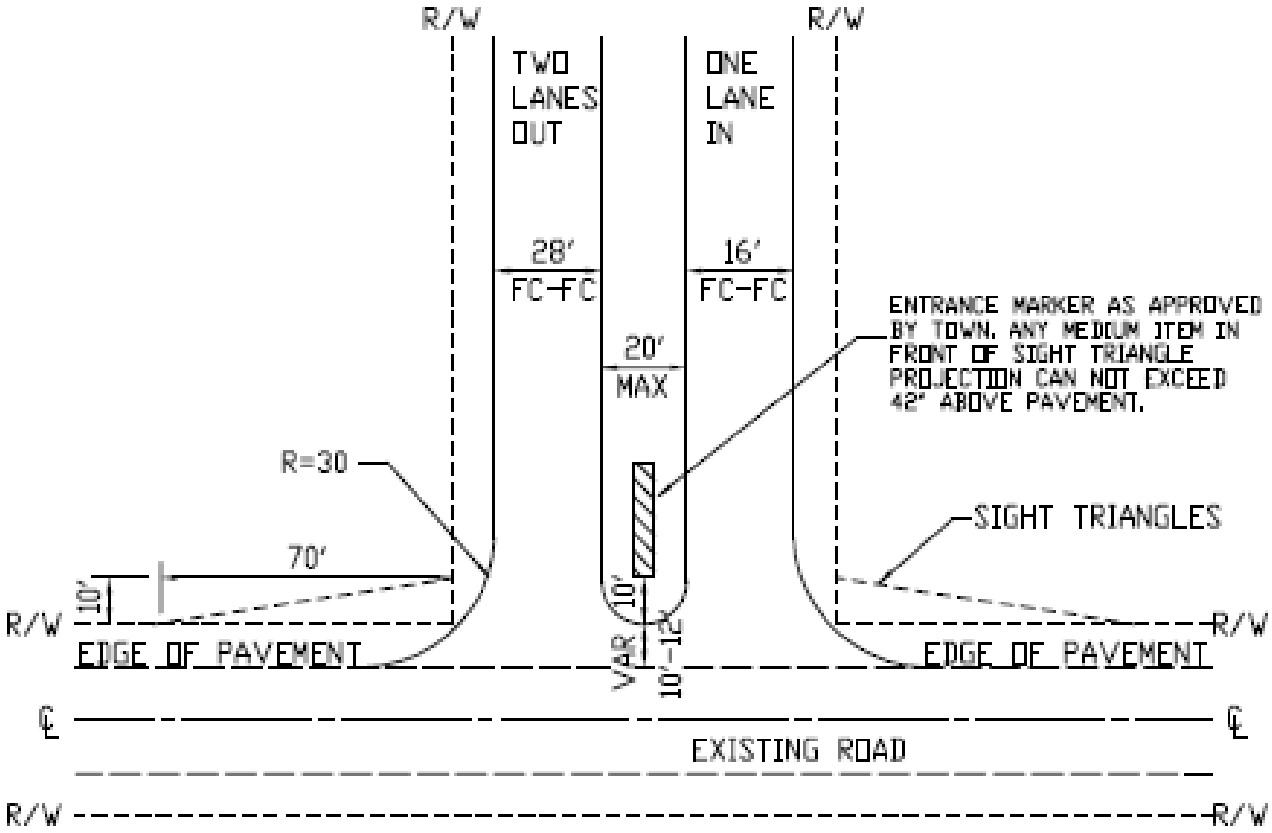

General Notes:

1. Minimum width of single lane is 16', face of curb to face of curb.

2. All driveways locations, grades, and cuts shall be at a minimum, in accordance with the latest edition of the "Policy on Street and Driveway access to North Carolina Highway", published by the North Carolina Department of Transportation, Traffic Engineering Branch.

3. Curb and gutter not shown for clarity. All dimensions are to face of standard 2' 6" curb & gutter or back to back of 2' valley gutter.

4. Maintenance of Median is the responsibility of the developer and/or his assignees.

Troutman, NC Standard Detail	Date: April 2006
Roads **DIVIDED ENTRANCE**	Scale: None Standard R-10

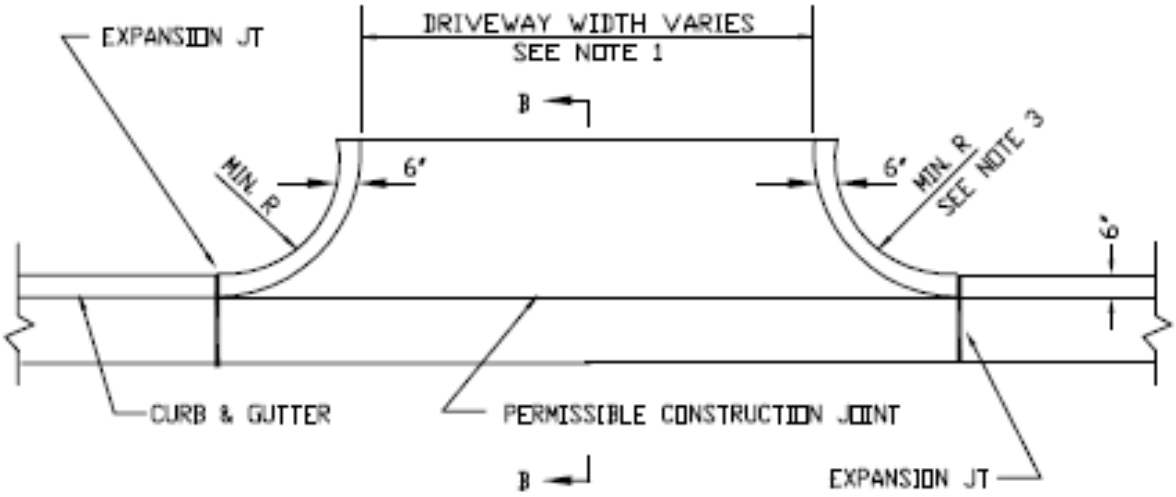

PLAN

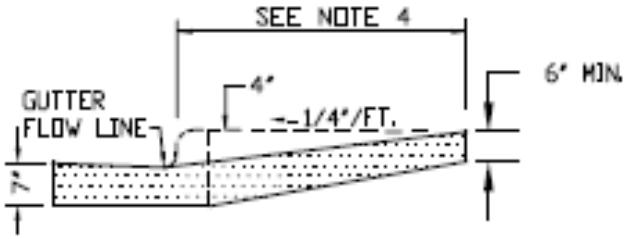

SECTION B-B

Notes:

1. Commercial Driveways shall be at a minimum, in accordance with the latest edition of the "Policy on Street and Driveway Access to North Carolina Highways", published by the North Carolina Department of Transportation, Traffic Engineering Branch. Residential Driveways shall be: 12' minimum, 24' maximum.

2. All concrete shall be 6" deep, minimum.

3. Minimum radius: residential 2' 6" minimum, 5' maximum; Commercial 5' minimum, 30' maximum.

4. The driveway ramp must rise 4" above the flow line of the gutter at a point no closer than 2' from the gutter.

Troutman, NC Standard Detail	Date: April 2006
Roads	Scale: None
DRIVEWAY RAMPS VERTICAL C & G	Standard R-11

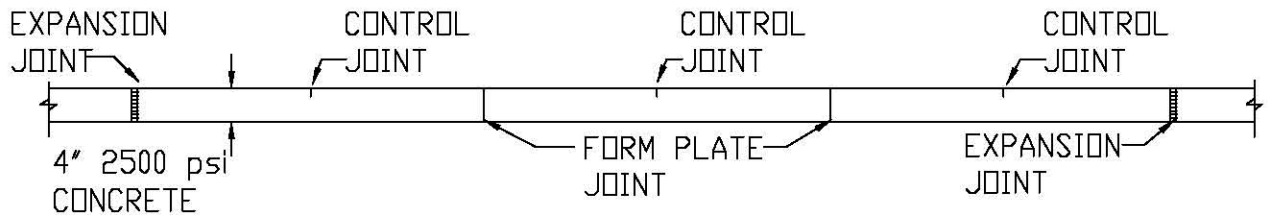

SECTION A-A

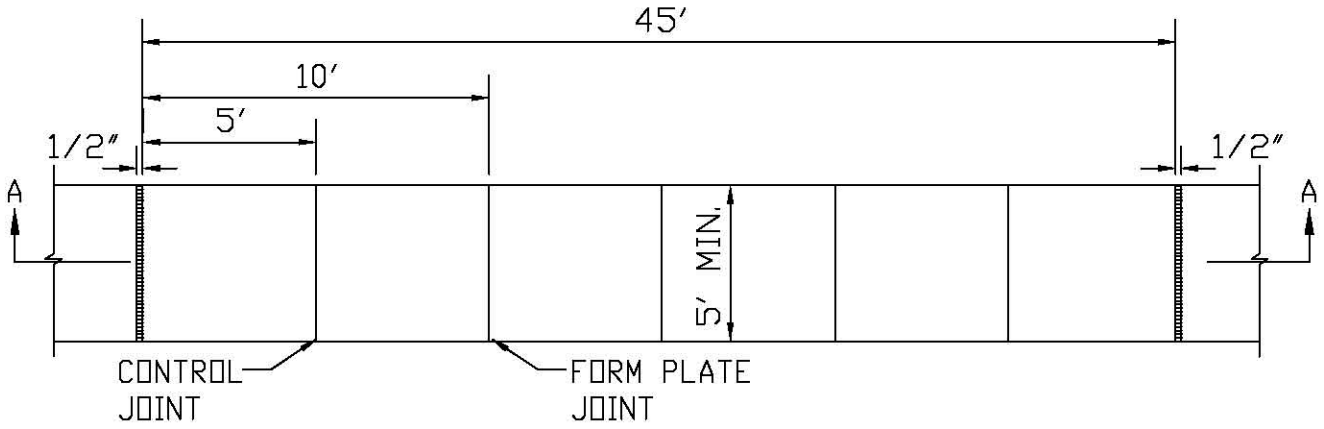

GENERAL NOTES:

1. A GROOVE JOINT 1" DEEP WITH 1/8" RADIUS SHALL BE REQUIRED IN THE CONCRETE SIDEWALK AT 5' INTERVALS. ONE 1/2" EXPANSION JOINT WILL BE REQUIRED AT 45' INTERVALS. A 1/2" EXPANSION JOINT WILL BE REQUIRED WHERE THE SIDEWALK JOINS ANY RIGID STRUCTURE.

2. SIDEWALK AT DRIVEWAY ENTRANCES TO BE 6" THICK FOR FULL DRIVEWAY WIDTH.

3. WIDTH OF SIDEWALKS ON ALL STREETS, EXCEPT IN THE CENTRAL BUSINESS DISTRICT, SHALL BE A MINIMUM OF 5' WIDE. WIDTH OF SIDEWALKS IN THE CENTRAL BUSINESS DISTRICT WILL BE DETERMINED BY THE TOWN.

4. SIDEWALKS TO BE POURED TO END OF RADIUS AT INTERSECTING STREETS, AND AROUND CUL-DE-SACS.

REVISED MAY 5, 2010

TROUTMAN, NC STANDARD DETAIL	DATE: APRIL 2006
ROADS	SCALE: NONE
SIDEWALKS	STANDARD R-12

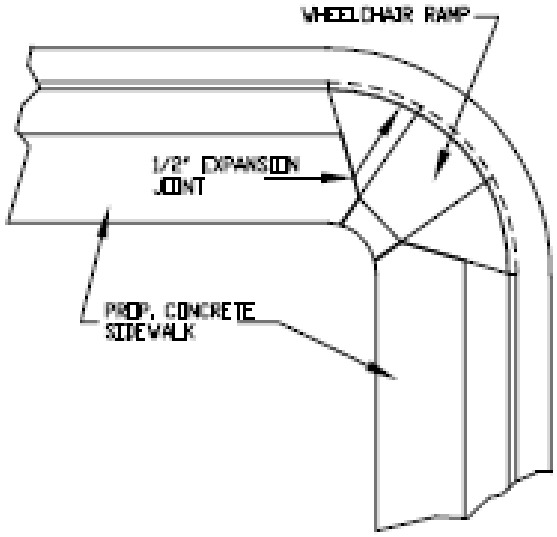

SINGLE RAMP SHOWN. DUAL RAMPS MAY BE REQUIRED DEPENDING ON PEDESTRIAN CROSSWALK LOCATIONS. LOCATION AND CONSTRUCTION TO MEET LATEST NCDOT AND ADA REQUIREMENTS.

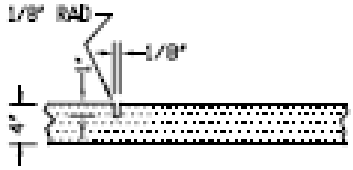

GROOVED JOINT IN SIDEWALK

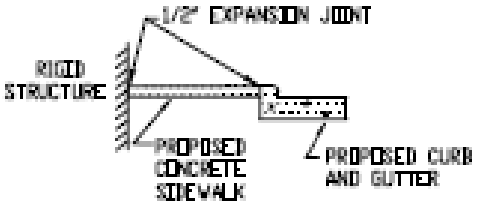

DETAILS SHOWING EXPANSION JOINTS IN CONCRETE SIDEWALK

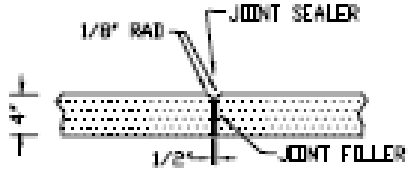

TRANSVERSE EXPANSION JOINT IN SIDEWALK

General Notes:

1. A groove joint 1" deep with 1/8" radius shall be required in the concrete sidewalk at 5' intervals. One ½" expansion joint will be required at 45' intervals. A ½" expansion joint will be required where the sidewalk joins any rigid structure.

Troutman, NC Standard Detail	Date: April 2006
Roads	Scale: None
SIDEWALK EXPANSION JOINTS	Standard R-13

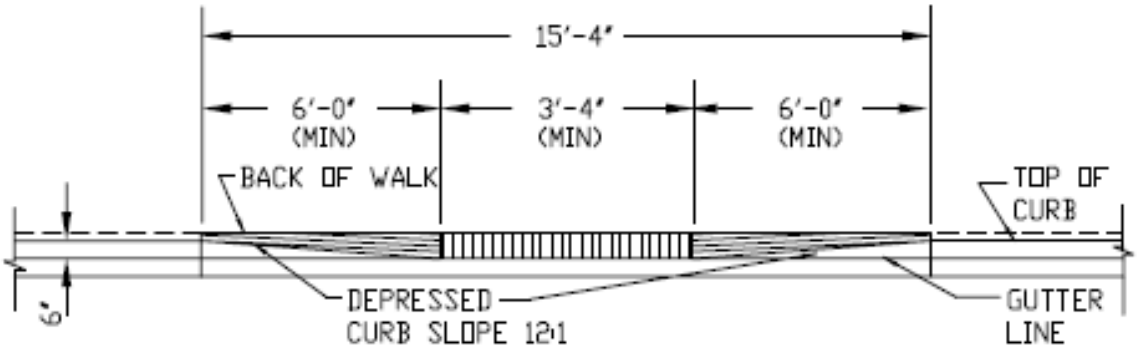

FRONT ELEVATION

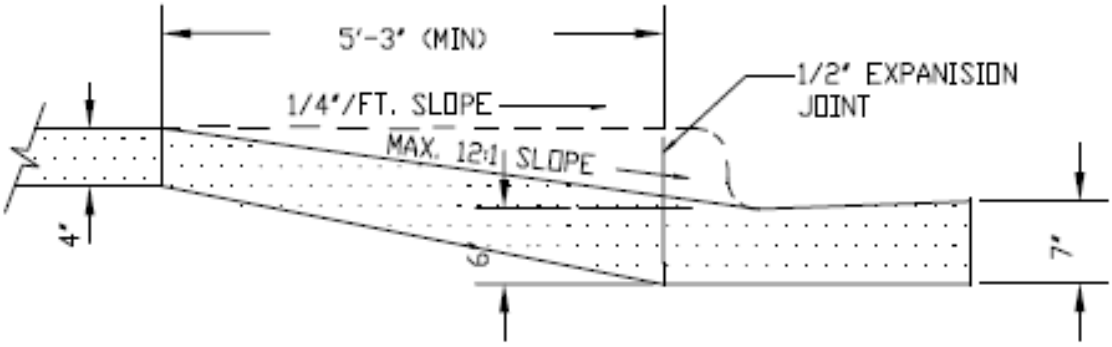

SECTION

Location of Wheelchair Ramps:
All street curbs being constructed or reconstructed or altered for any reason, shall provide wheelchair ramps for the physically handicapped at all intersection where both curb and gutter and sidewalk are provided and at other major points of pedestrian flow. Provisions for ramps shall be made in all curb construction where sidewalks are initially planned or may be constructed in the future.

Construction Notes:

1. No slope shall exceed 1":1' (12:1) on the ramps or sidewalks.

2. In no case shall the width of wheelchair ramps be less than 40", width may exceed 40" if necessary.

3. Concrete surface shall have a rough, non-skid finish.

4. A ½" expansion joint will be required where the concrete wheelchair ramp joins any rigid pavement or structure.

Troutman, NC Standard Detail	Date: April 2006
Roads	Scale: None
WHEELCHAIR RAMP	Standard R-14

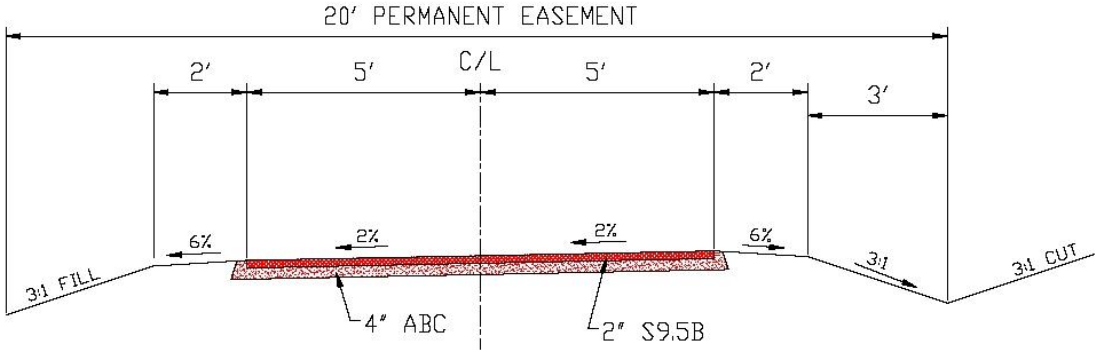

GREENWAY TYPICAL CROSS SECTION

GENERAL NOTES:

1. GREENWAY TRAILS SHALL MEET ADA STANDARDS WHERE PRACTICAL. LONGITUDINAL SLOPES UP TO 8% ARE ACCEPTABLE FOR SHORT DISTANCES WHERE 5% GRADES ARE NOT POSSIBLE AS DETERMINED BY THE TRC.
2. SUBGRADE SHALL BE PROOFROLED AND APPROVED BY THE TOWN ENGINEER PRIOR TO PAVING.
3. THE EDGES OF THE TRAIL SHALL BE A MINIMUM DISTANCE OF 5 FEET FROM TREES, RAISED MANHOLES, AND OTHER RAISE UTILITIES.
4. THE MINIMUM CENTERLINE RADIUS SHALL BE 50 FEET.
5. TREE LIMBS SHALL BE TRIMMED UP TO 12 FEET ABOVE THE FINISHED TRAIL GRADE AND WITHIN 10 FEET HORIZONTALLY FROM THE TRAIL EDGES. DANGEROUS TREE LIMBS OVER THE TRAIL AND DEAD TREES NEAR THE TRAIL SHALL BE REMOVED AS DETERMINED BY THE TOWN.

GREENWAY BOARDWALKS

1. BOARDWALKS MAY BE USED TO CROSS WETLAND AREAS, POORLY DRAINED AREAS, ENVIRONMENTALLY SENSITIVE AREAS, CREEKS/STREAMS OR RAVINES.
2. BOARDWALKS SHALL HAVE A CLEAR DISTANCE OF 10 FEET BETWEEN SAFETY RAILS.
3. SAFETY RAILS SHALL BE A MINIMUM OF 42 INCHES TALL.
4. BOARDWALKS STRUCTURES SHALL BE LOCATED A MINIMUM OF 15 FEET FROM THE CENTER OF ALL SEWER LINES.
5. BOARDWALKS SHALL BE DESIGNED AND SEALED BY A PROFESSIONAL ENGINEER IN ACCORDANCE WITH AASHTO STANDARD SPECIFICATIONS FOR HIGHWAY BRIDGES (LATEST EDITION). A LIVE LOAD OF 85 POUNDS PER SQUARE FOOT SHALL BE USED.
6. CONSTRUCTION MATERIALS SHALL BE WEATHER RESISTANT AND WILL BE SUBJECT TO TOWN APPROVAL.
7. WHEN REQUIRED, BOARDWALKS MUST RECEIVE NECESSARY FEMA APPROVALS.

TROUTMAN, NC STANDARD DETAIL	DATE: PRELIMINARY 2013
ROADS GREENWAY STANDARD	SCALE: NONE
	STANDARD R-15

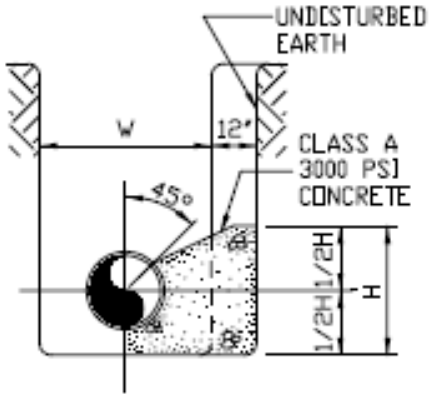

TYPICAL SECTION
TEE OR BEND

CONCRETE THRUST BLOCK SCHEDULE								
PIPE SIZE INCHES	BEND							
	90 (TEE)		45°		22 1/2°		11 1/4°	
	H	L	H	L	H	L	H	L
2"	.75'	1.5'	.50'	1.0'	.50'	.75'	.50'	.50'
4"	1.5'	3.0'	1.0'	2.5'	1.0'	1.5'	1.0'	1.0'
6"	2.0'	4.0'	1.5'	3.5'	1.0'	3.0'	1.0'	1.5'
8"	2.5'	5.0'	2.5'	4.0'	1.5'	3.5'	1.0'	2.5'
10"	3.0'	6.5'	2.5'	5.0'	2.0'	4.0'	1.0'	3.0'
12"	3.5'	8.0'	3.0'	5.0'	2.5'	5.0'	1.5'	3.5'

* FOR DESIGN PRESSURE=200 PSI
FOR PIPE SIZES LARGER THAN 12"
DESIGN FOR ACTUAL THRUST FOR
PRESSURE = 200 PSI

SIZE SCHEDULE

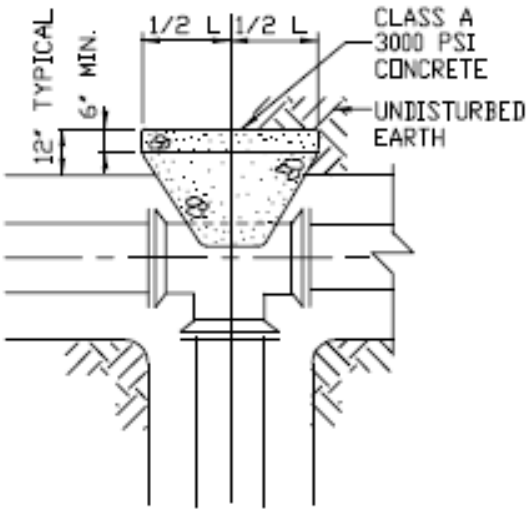

PLAN – TEE

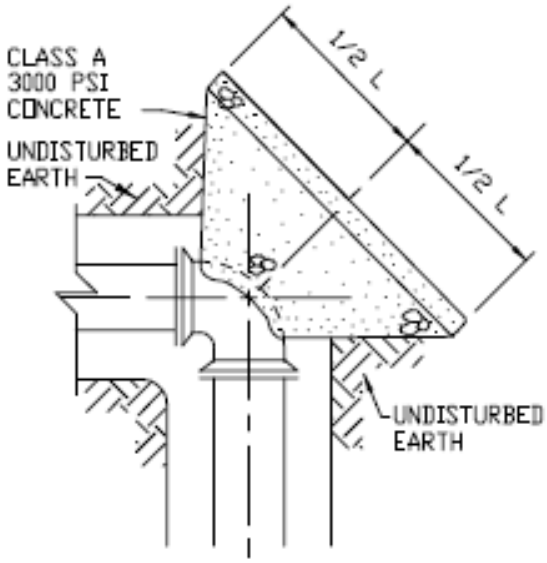

PLAN – BEND

Troutman, NC Standard Detail	Date: April 2006
Water Systems	Scale: None
THRUST BLOCKING	Standard W-1

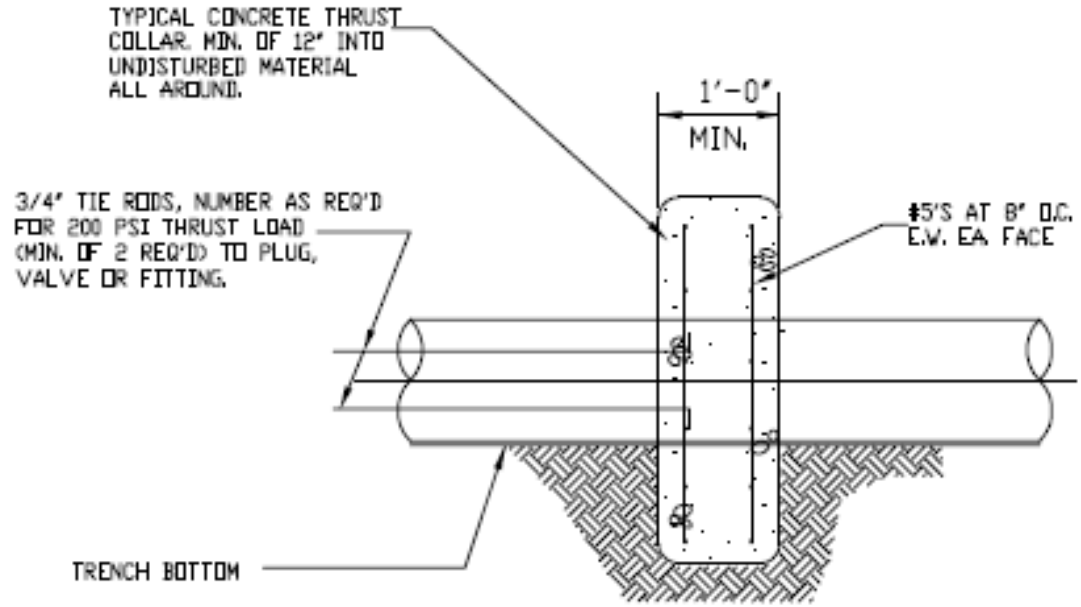

SIDE ELEVATION

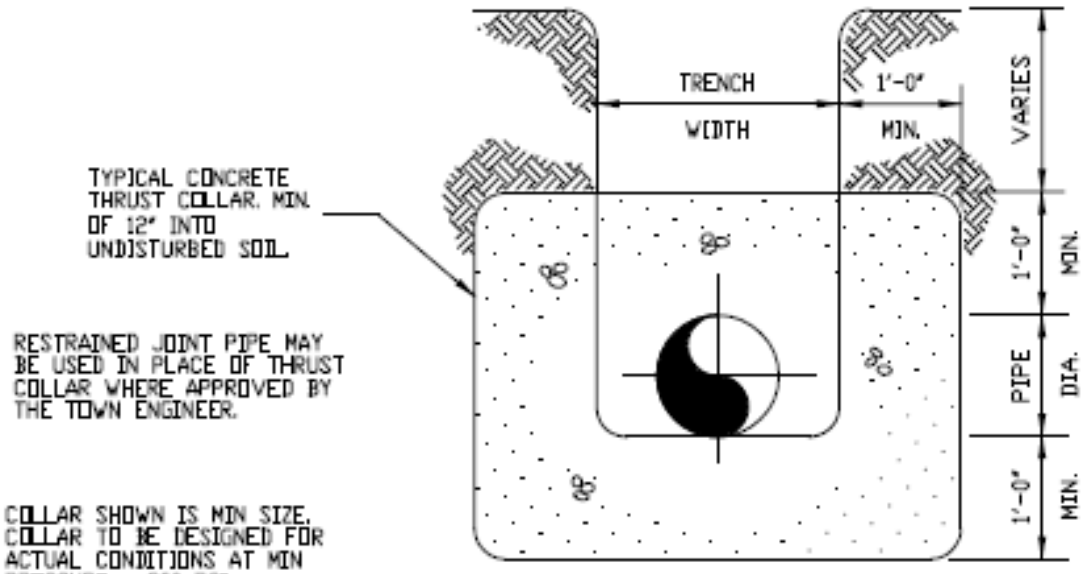

END ELEVATION

Troutman, NC Standard Detail	Date: April 2006
Water Systems	Scale: None
THRUST COLLAR	Standard W-2

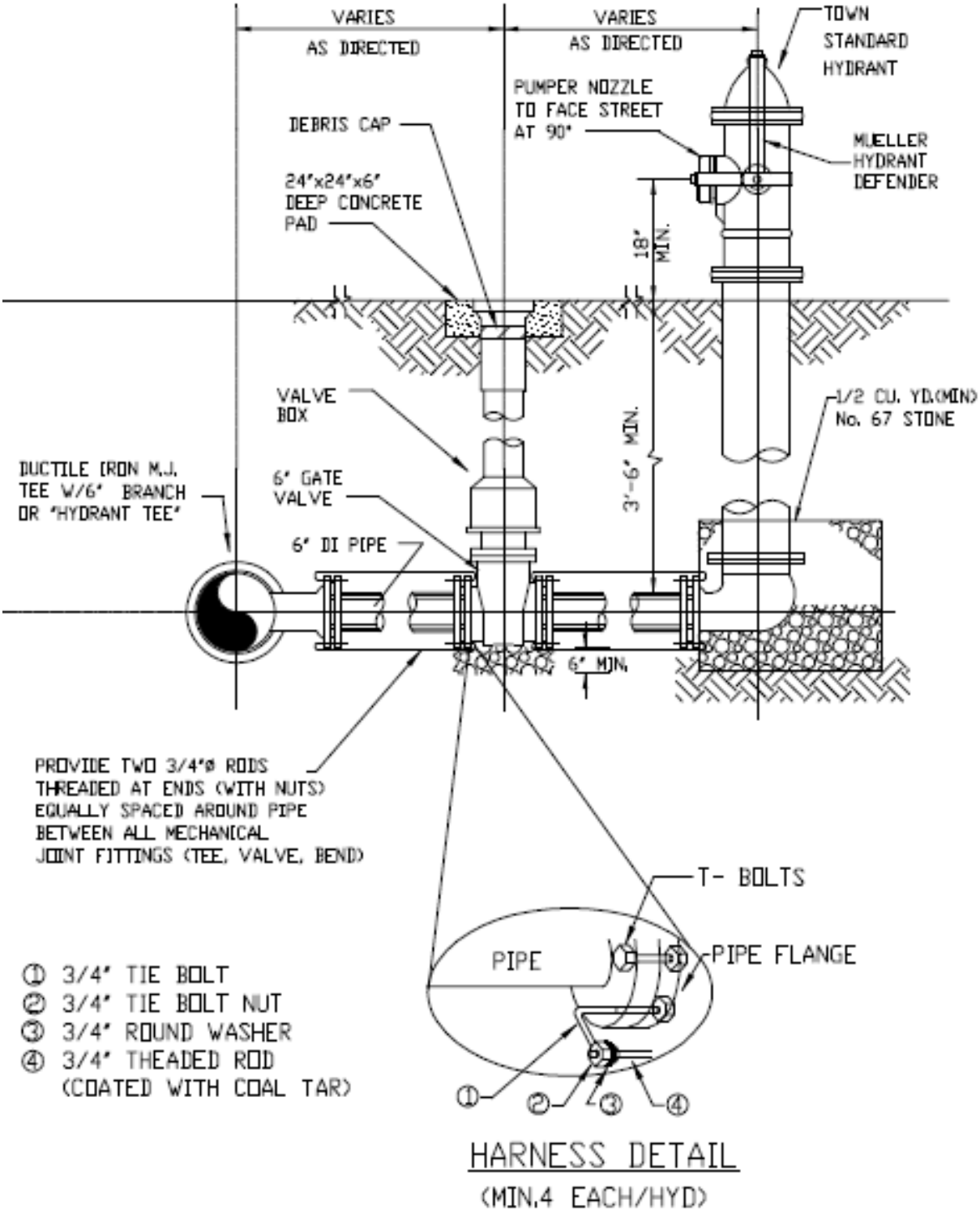

Troutman, NC Standard Detail	Date: April 2006
Water Systems	Scale: None
FIRE HYDRANT ASSEMBLY	Standard W-3

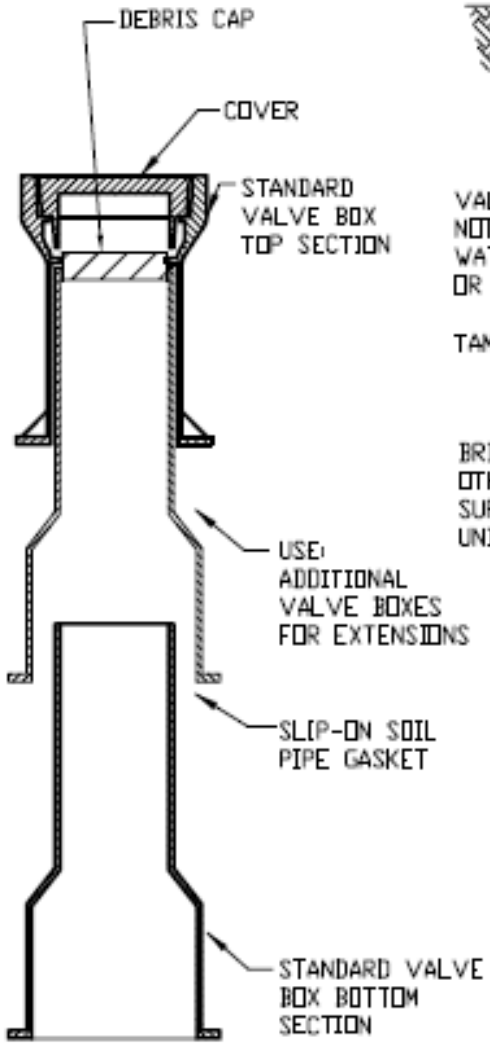

EXTENSION

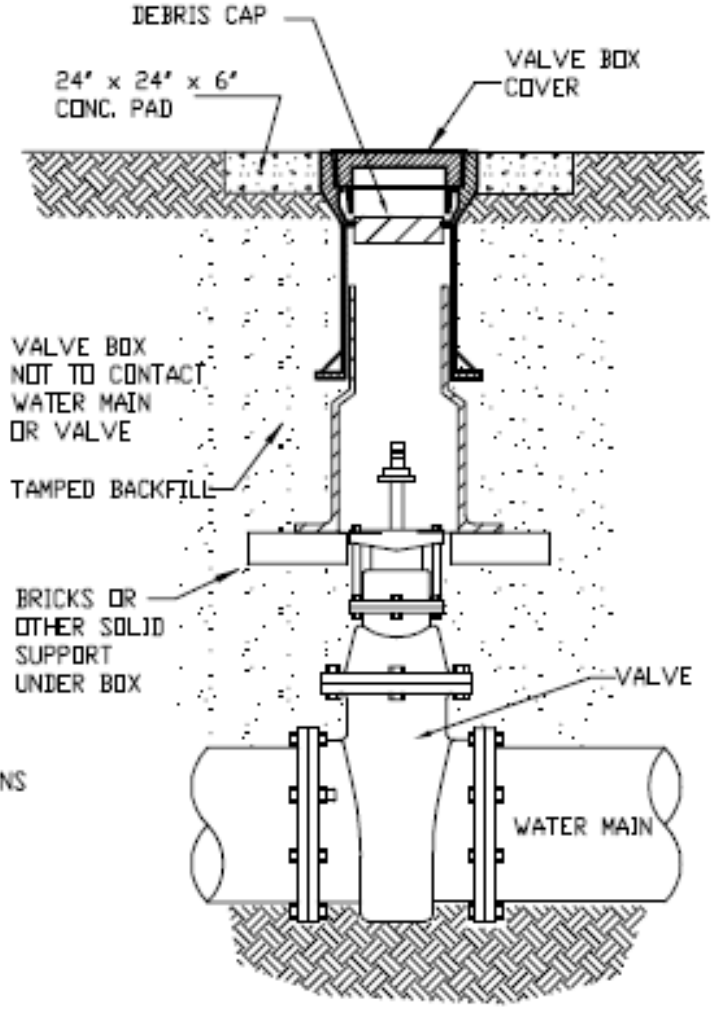

INSTALLATION

NOTE:
INSTALLATION IN UNPAVED AREA SHOWN.
IN PAVED AREAS USE SCREW TYPE BOX AND PLACE TOP OF CONC. PAD FLUSH WITH TOP OF STONE BASE

Troutman, NC Standard Detail	Date: April 2006
Water Systems **VALVE BOX INSTALLATION**	Scale: None
	Standard W-4

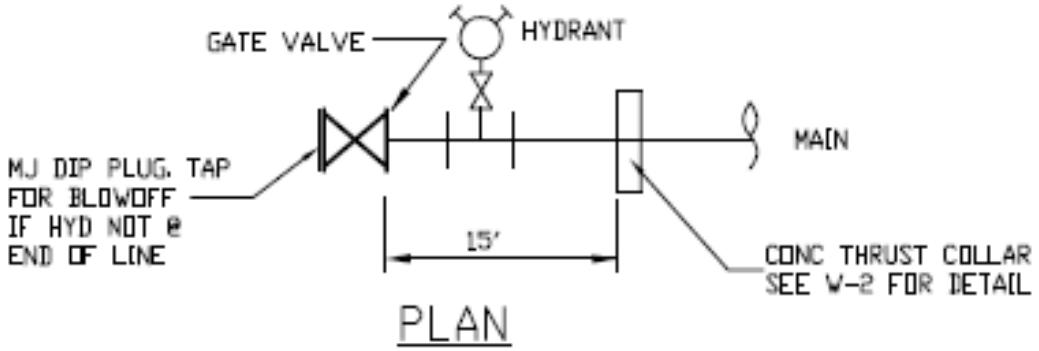

PLAN

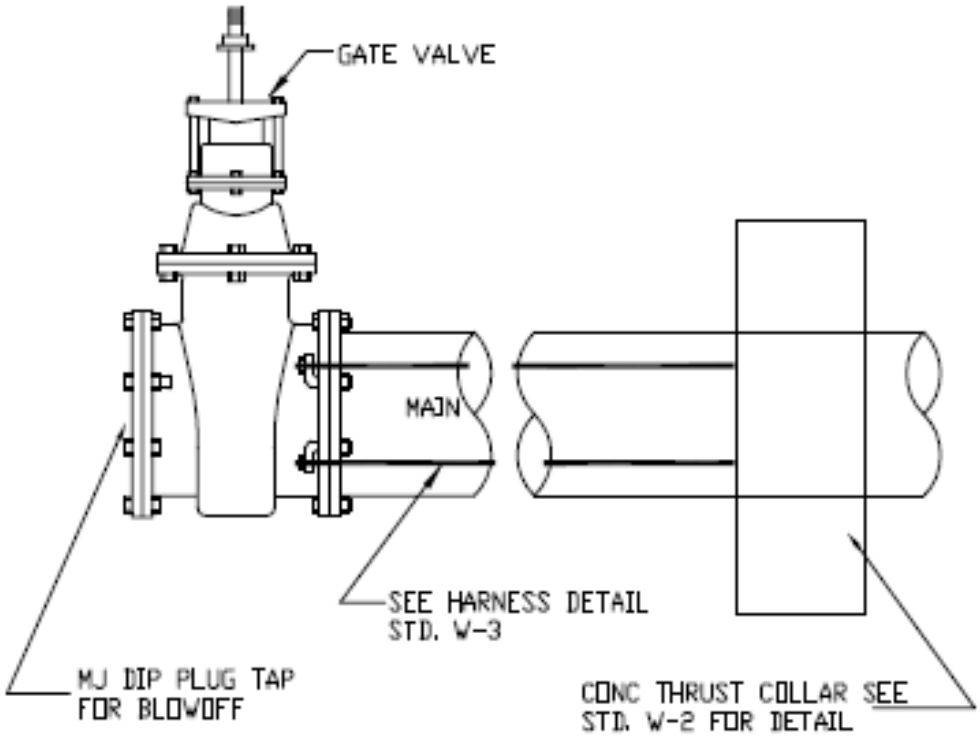

ELEVATION

Troutman, NC Standard Detail	Date: April 2006
Water Systems	Scale: None
DEAD END LINES	Standard W-5

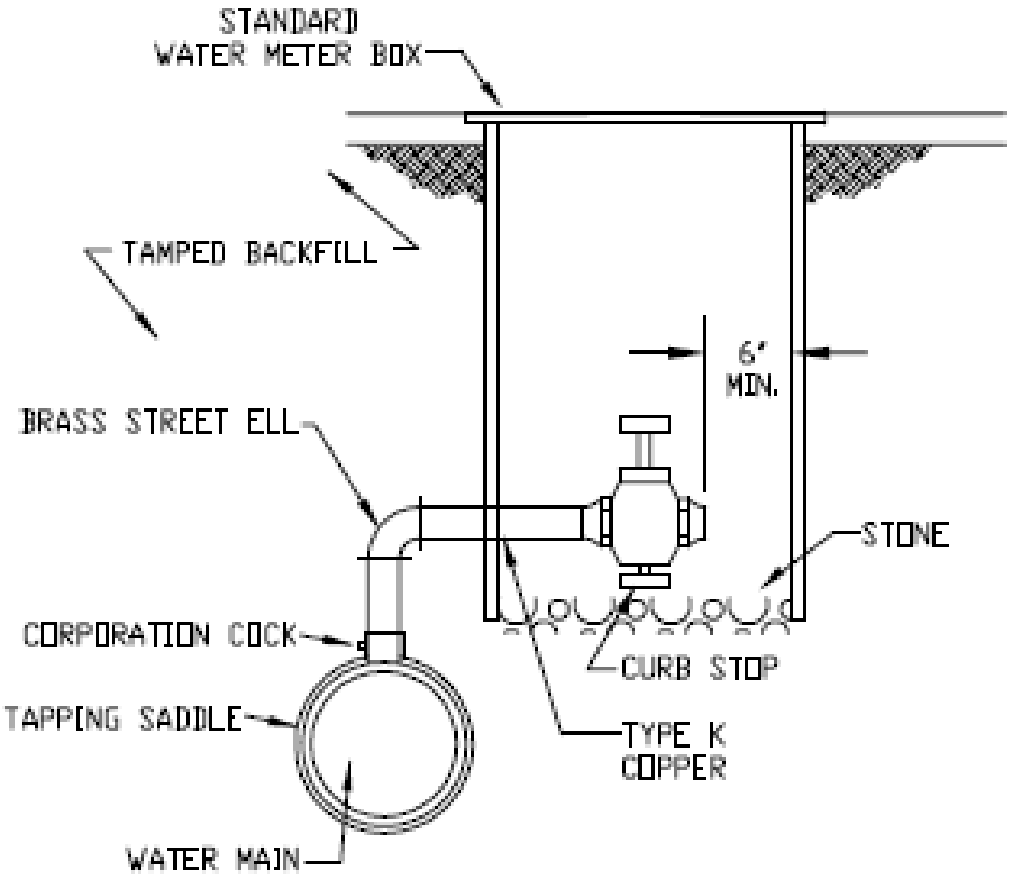

Notes:

1. All piping is Type K Soft Copper

2. Air valves to be installed at all points between outlets on the pipe (hydrants, services, etc.) where the elevation of the crown of the pipe is higher than the other outlets.

3. On 12" & smaller pipe, 1" assembly required.

4. On pipes larger than 12", 2" assembly required.

5. May also be used for sampling tap. Sampling taps to be placed at a minimum, at the end of all mains, at the end of all branches and at intervals of 1 mile for mains longer than a mile if no other outlets suitable for sampling are available.

Troutman, NC Standard Detail	Date: April 2006
Water Systems	Scale: None
AIR RELEASE VALVE	Standard W-6

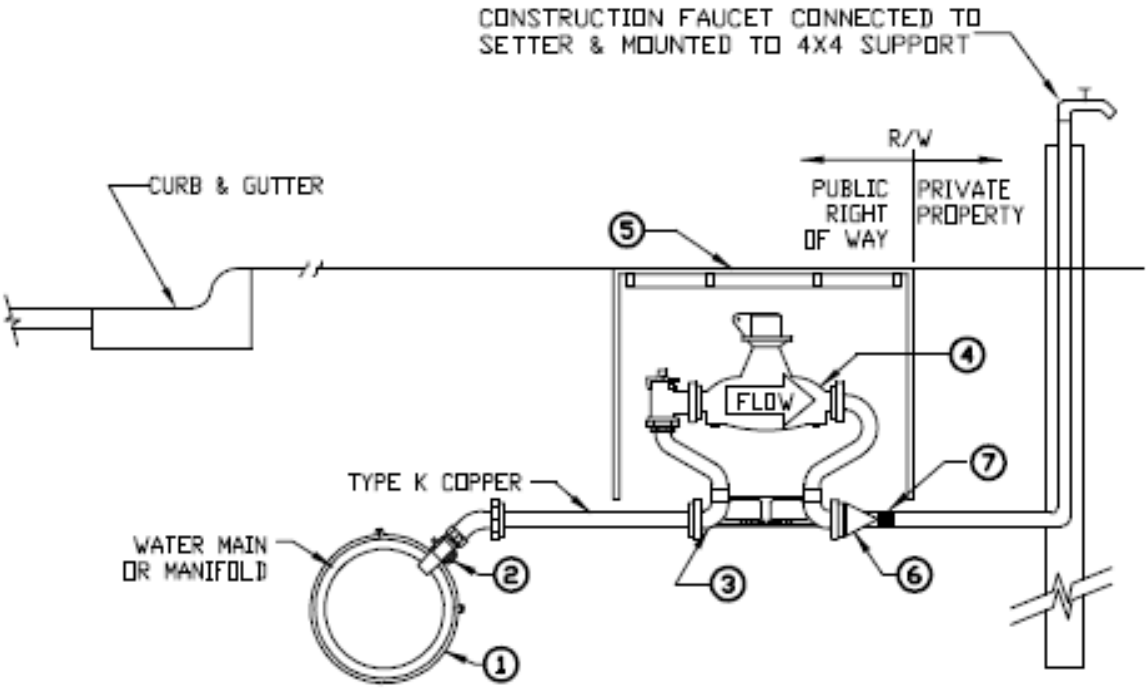

	¾”	1”
1. Brass Tapping Saddle –Required for taps on all existing 2” PVC & galvanized pipe. AWWA thread.	Ford S-70-203	Ford S-70-203
2. Tapping Saddle- All other pipe thread AWWA tap.	Rockwell Type 313	Rockwell Type 313
3. Corporation cock- Inlet AWWA Thread Outlet CT PJ	Ford F-1000	Ford F-1000
	(Equal Mueller & Hayes Models are acceptable)	
4. Meter Setter	McDonald 24-207 WDTD 33 5/8” and 3/4”	
5. Meter	Neptune T-10 with R 900 Radio read assembly	
6. Meter Box	NDS D-1800 18” meter box with drop in top mount cover	
7. Check Valve	Built in Setter	Built in Setter
8. Temporary Brass Plug- For services not to be immediately connected.		
9. All items as specified or approved equal.		

Notes:
For new installations town will furnish meter, meter setter, & meter box at cost. All other materials & installation of all items except meter by the contractor. Town will install meter after service connection fee is paid.

Troutman, NC Standard Detail	Date: April 2006
Water Systems **¾” & 1” METER CONNECTION**	Scale: None
	Standard W-7

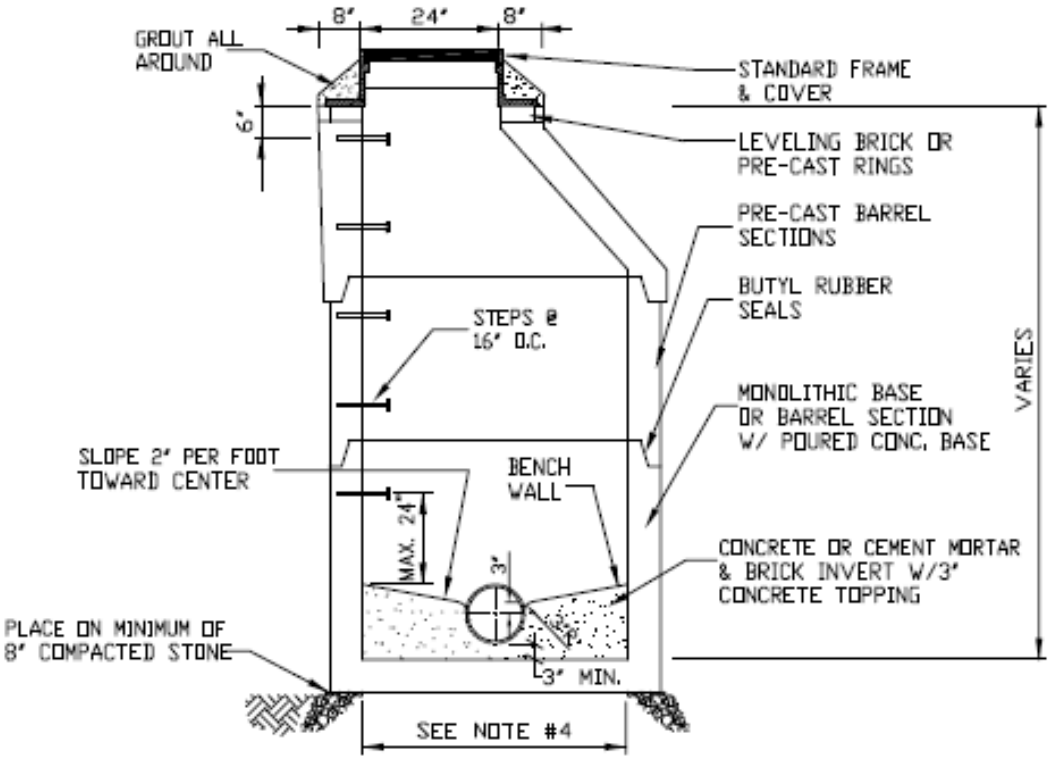

SECTION

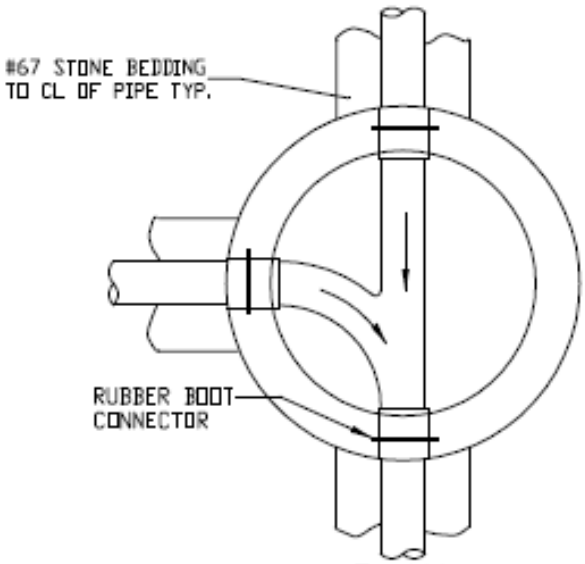

PLAN

NOTES:

1. MANHOLE TO CONFORM WITH ASTM C478.
2. STEPS TO BE PLASTIC COATED REBAR
3. BUTYL RUBBER SEALANT TO MEET FEDERAL SPECIFICATION (GSA-FSS) SS-S-00210.
4. INSIDE DIA. AS REQUIRED BY PIPE SIZES & ANGLES

Troutman, NC Standard Detail	Date: April 2006
Sewer Systems	Scale: None
PRECAST MANHOLE	Standard SS-1

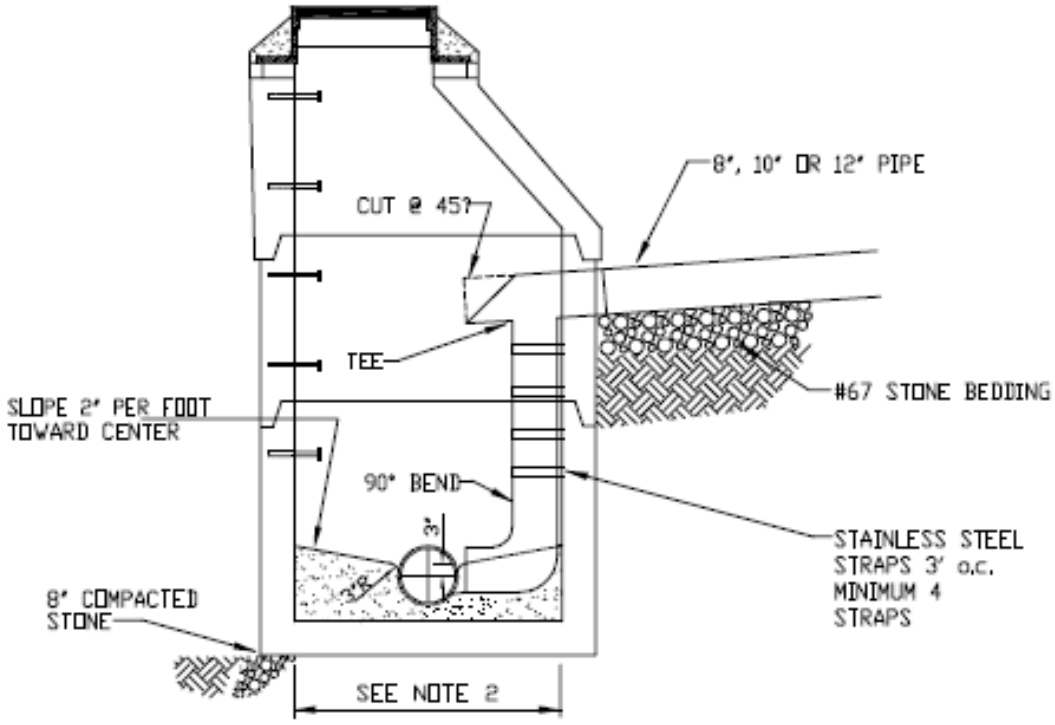

SECTION

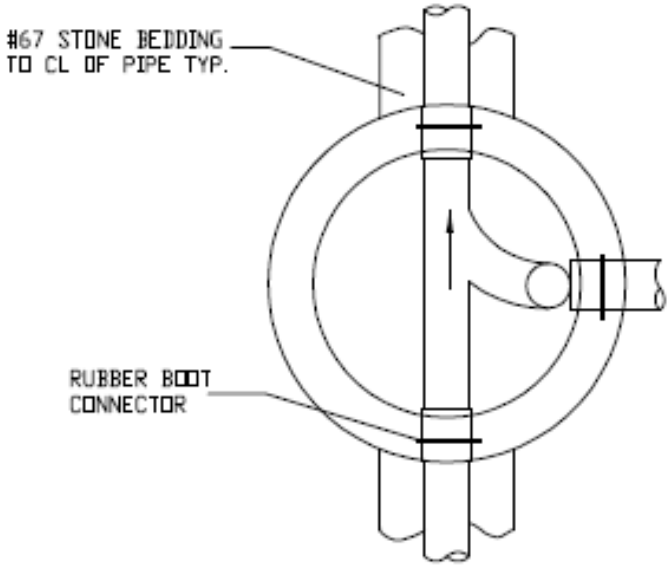

PLAN

NOTES:

1. INSIDE DROPS TO BE USED FOR PIPE 12" AND SMALLER
2. MINIMUM MH DIA 5'. MIN. 6' DIA FOR 10" & 12" PIPE UNLESS RUN FROM DROP IS STRAIGHT THROUGH MANHOLE
3. DROPS REQUIRED WHERE INVERT IN IS 30" OR MORE ABOVE INVERT OUT
4. TEE BRANCH THE SAME SIZE AS MAIN LINE
5. SEE SS-1 FOR ADDITIONAL MANHOLE DIMENSIONS

Troutman, NC Standard Detail	Date: April 2006
Sewer Systems	Scale: None
PRECAST MH W/INSIDE DROP	Standard SS-2

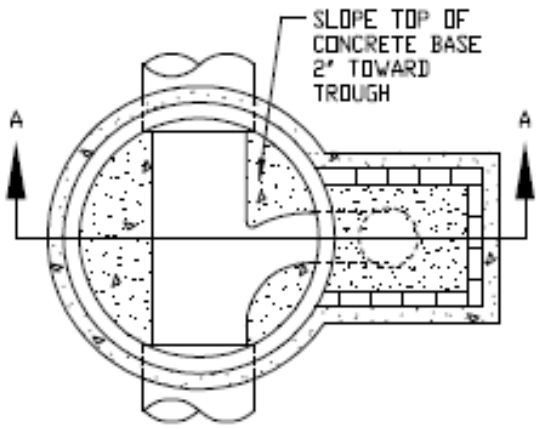

PLAN

NOTES:

1. MANHOLE BASE SHALL BE 3000 P.S.I. CONCRETE PLACED ON UNDISTURBED EARTH AND MAY BE PLACED AGAINST SHAPED BANKS IN LIEU OF FORMS.
2. ALL MASONRY MORTAR SHALL BE PORTLAND CEMENT 1:3 MIX.
3. CARE MUST BE TAKEN TO FORM A SMOOTH FINISH TROUGH FROM ENTRANCE PIPES TO EXIT PIPE, AND IN CURVED MANHOLES THE TROUGH MUST BE A SMOOTH CIRCULAR ARC TANGENT TO THE INSIDE WALLS OF THE PIPES AT THEIR ENDS.
4. PROTECTIVE WALL FOR OUTSIDE DROP SHALL BE A MINIMUM OF 8" MASONRY.
5. THE SLOPE OF THE OUTSIDE DROP TROUGH SHALL BE 1/4" PER FOOT.
6. MANHOLE TO CONFORM WITH ASTM C478 AND PRECAST MANHOLE STD.
7. RAMSET MASONRY TIES EVERY 12 INCHES ON OUTSIDE DROP.
8. M.H. ID 6' MIN. FOR PIPES 15" & LARGER OR AS REQ'D BY SIZE & ANGLES.

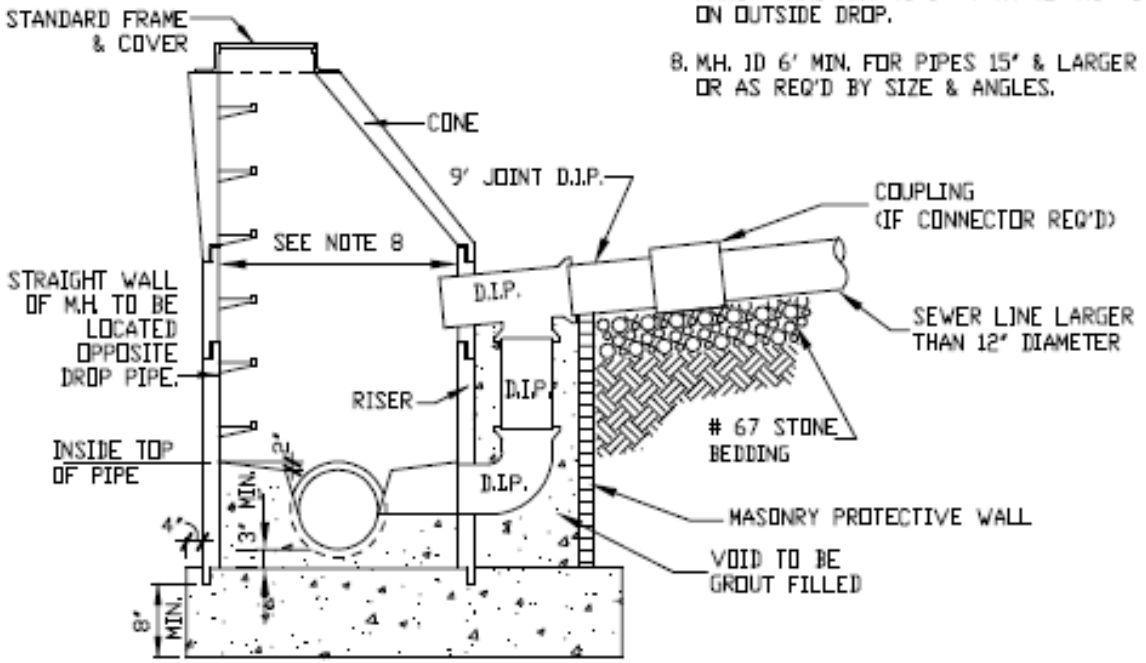

SECTION A-A

Troutman, NC Standard Detail	Date: April 2006
Sewer Systems	Scale: None
PRECAST MH W/OUTSIDE DROP	Standard SS-3

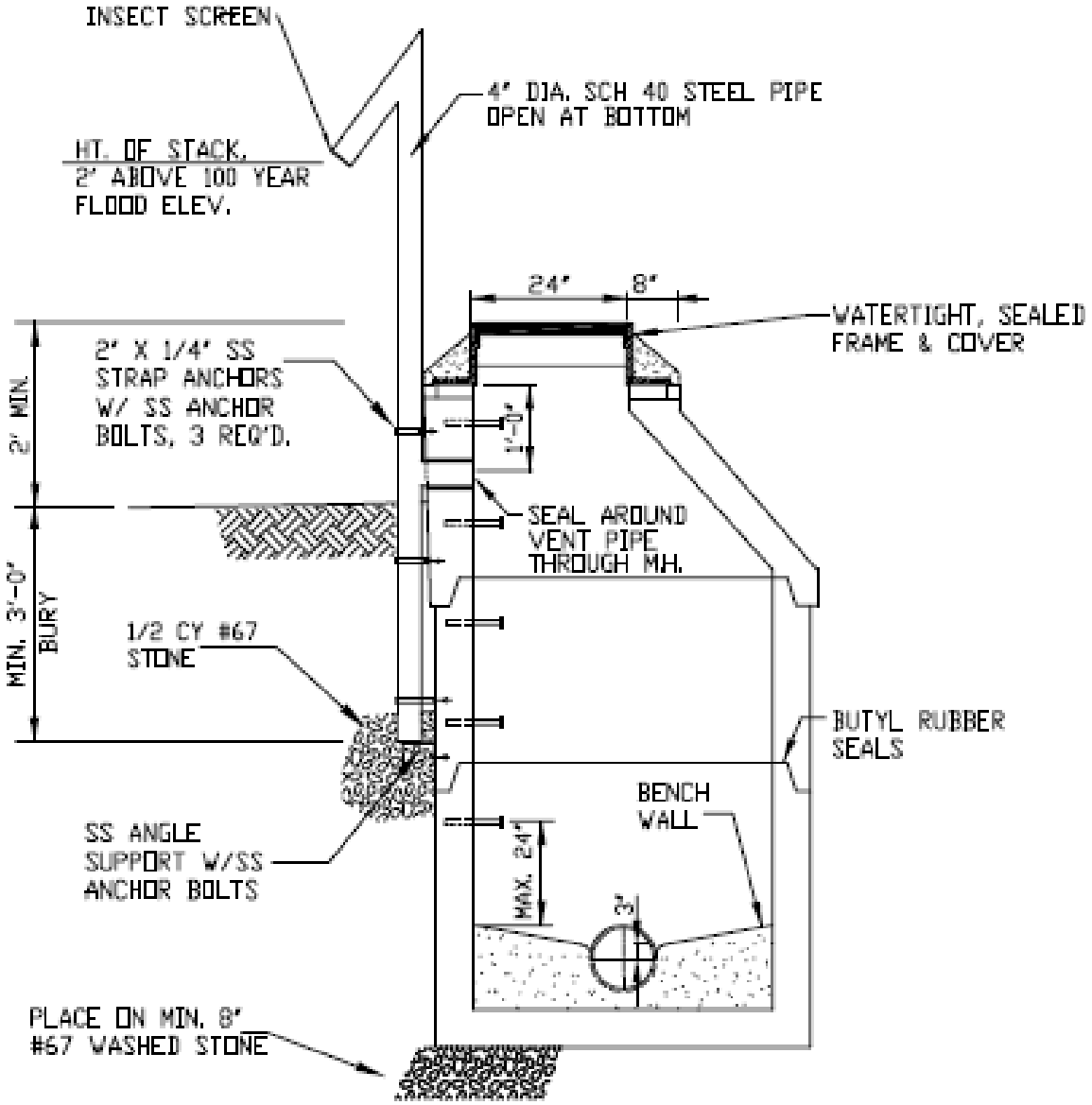

M.H. SECTION

Note:
Steel pipe to have an inside coal-tar lining, 3/32" minimum thickness. The outside shall be sand or grit blasted and coated with two coats of urethane paint such as TNEMEC 73-Endura Shield for a total dry film thickness of 5 mils. Color to be "Olive Green".

Troutman, NC Standard Detail	Date: April 2006
Sewer Systems	Scale: None
MANHOLE VENT	Standard SS-4

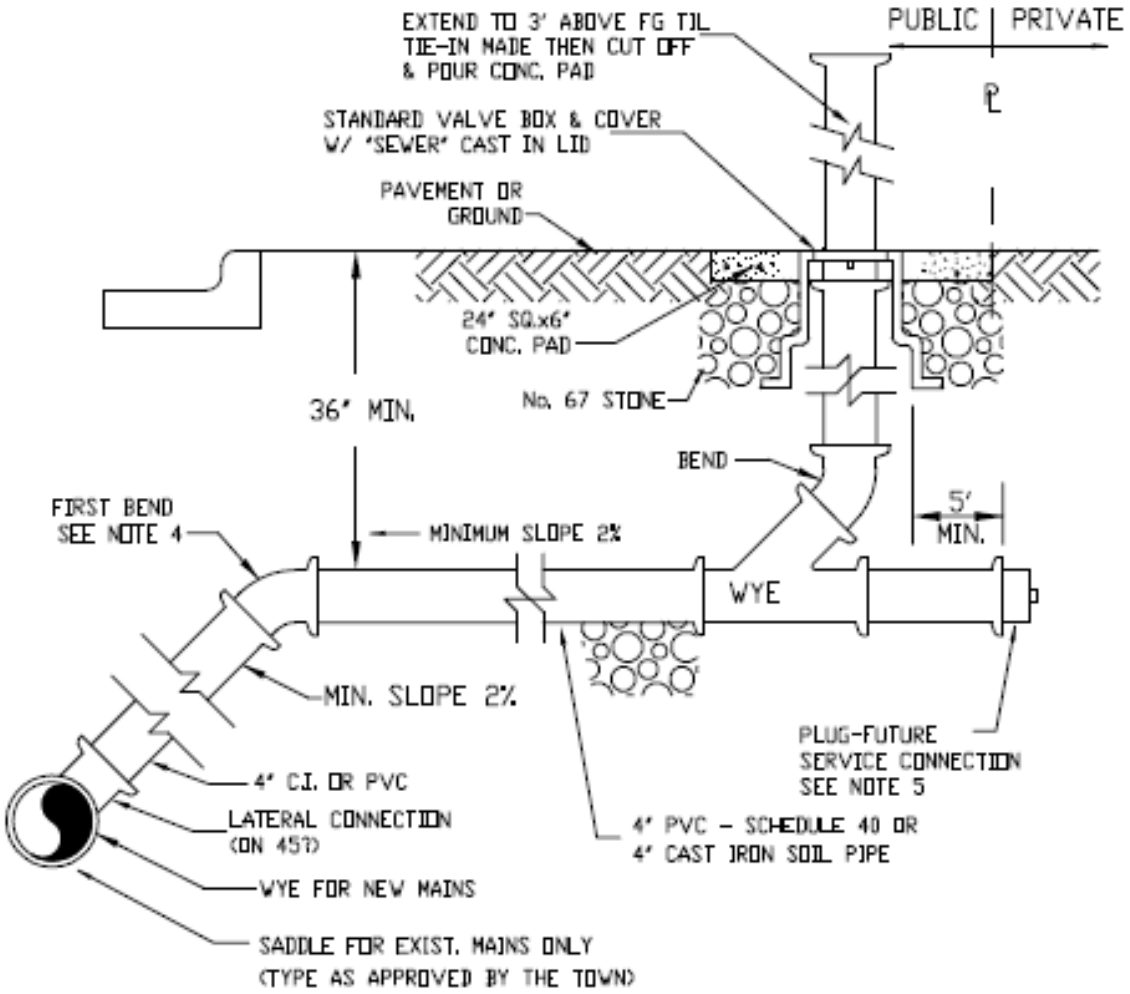

Notes:

1. The full length of the service ditch shall be compacted in 8" loose layers with mechanical tamps, to 95% standard proctor.

2. The Town shall make taps on existing lines unless otherwise approved.

3. Bends 1/16, 1/8, ¼, as required.

4. First bend shall occur behind back of curb unless specifically approved by the Utilities Director.

5. If service line to main at CO is deep, future connection may be tied to vertical CO stack w/WYE & bend and stack to service line with long sweep 90˚ ELL in lieu of WYE & bend.

Troutman, NC Standard Detail	Date: April 2006
Sewer Systems	Scale: None
TAP & STUB-OUT	Standard SS-5

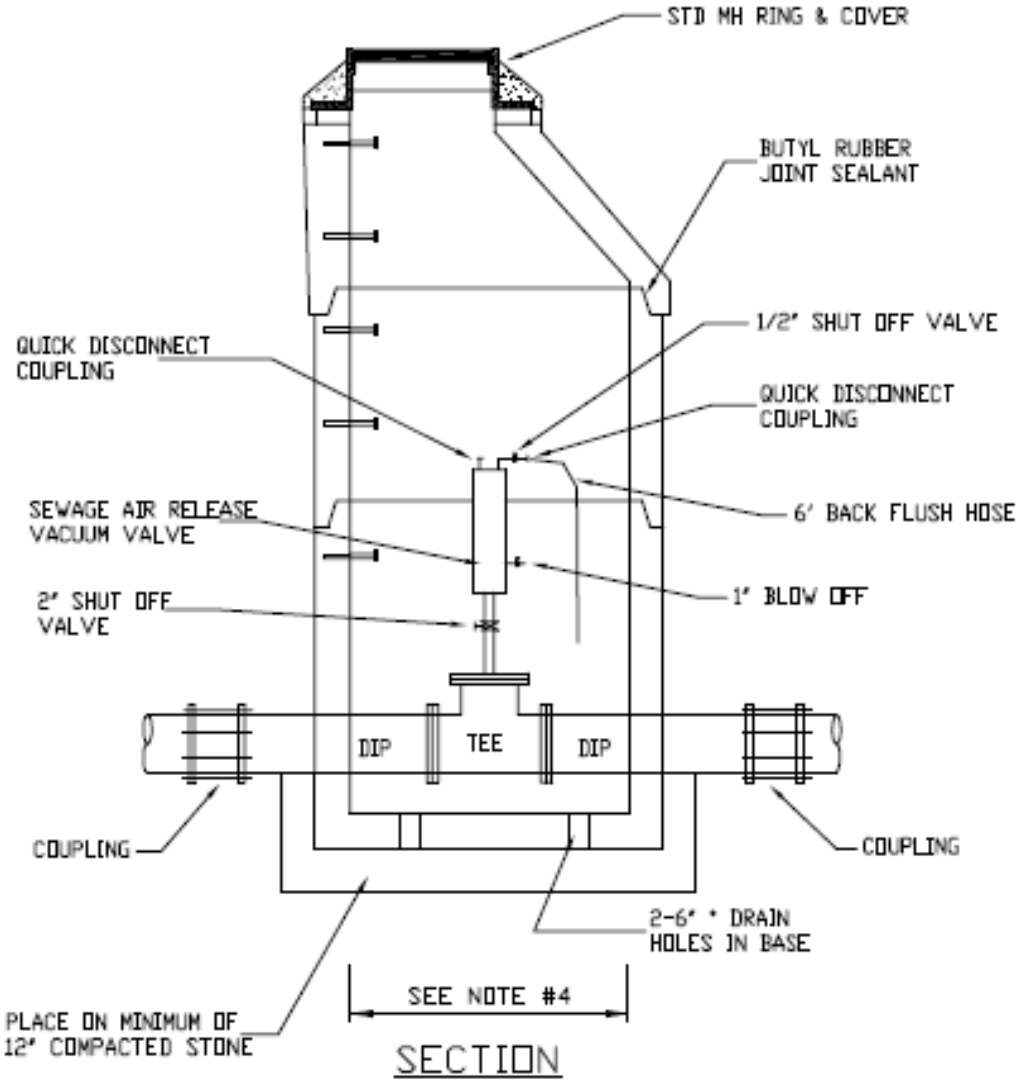

Notes:

1. Manhole to conform with ASTM C478.

2. Steps to be plastic coated rebar.

3. Butyl rubber sealant to meet Federal specification (GSA-FSS) SS-S-00210.

4. Inside DIA, as required by valve size & angles.

Troutman, NC Standard Detail	Date: April 2006
Sewer Systems **AIR VALVE MANHOLE**	Scale: None
	Standard SS-6

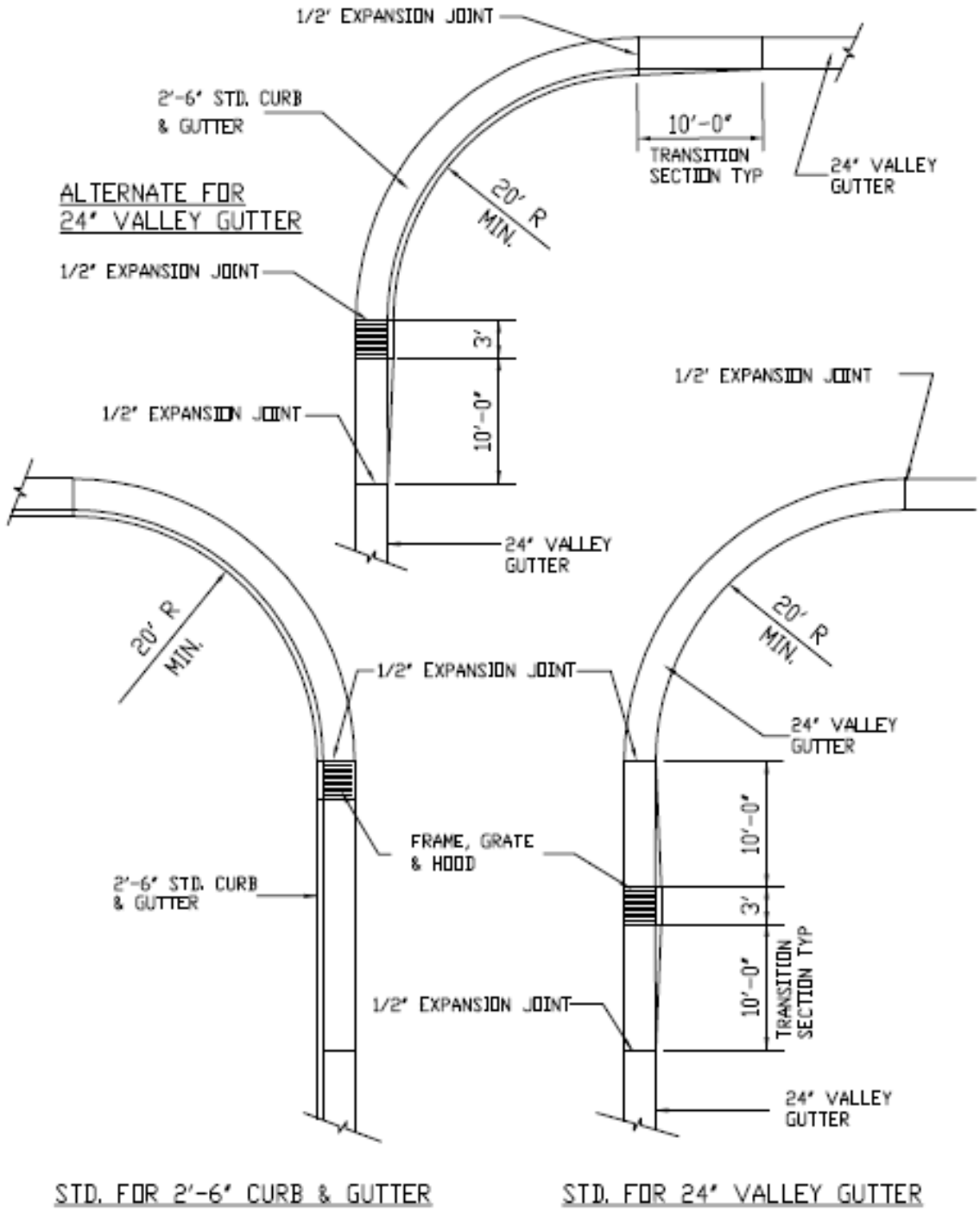

Troutman, NC Standard Detail	Date: April 2006
Storm Drainage	Scale: None
CATCH BASINS AT INTERSECTIONS	Standard SD-1

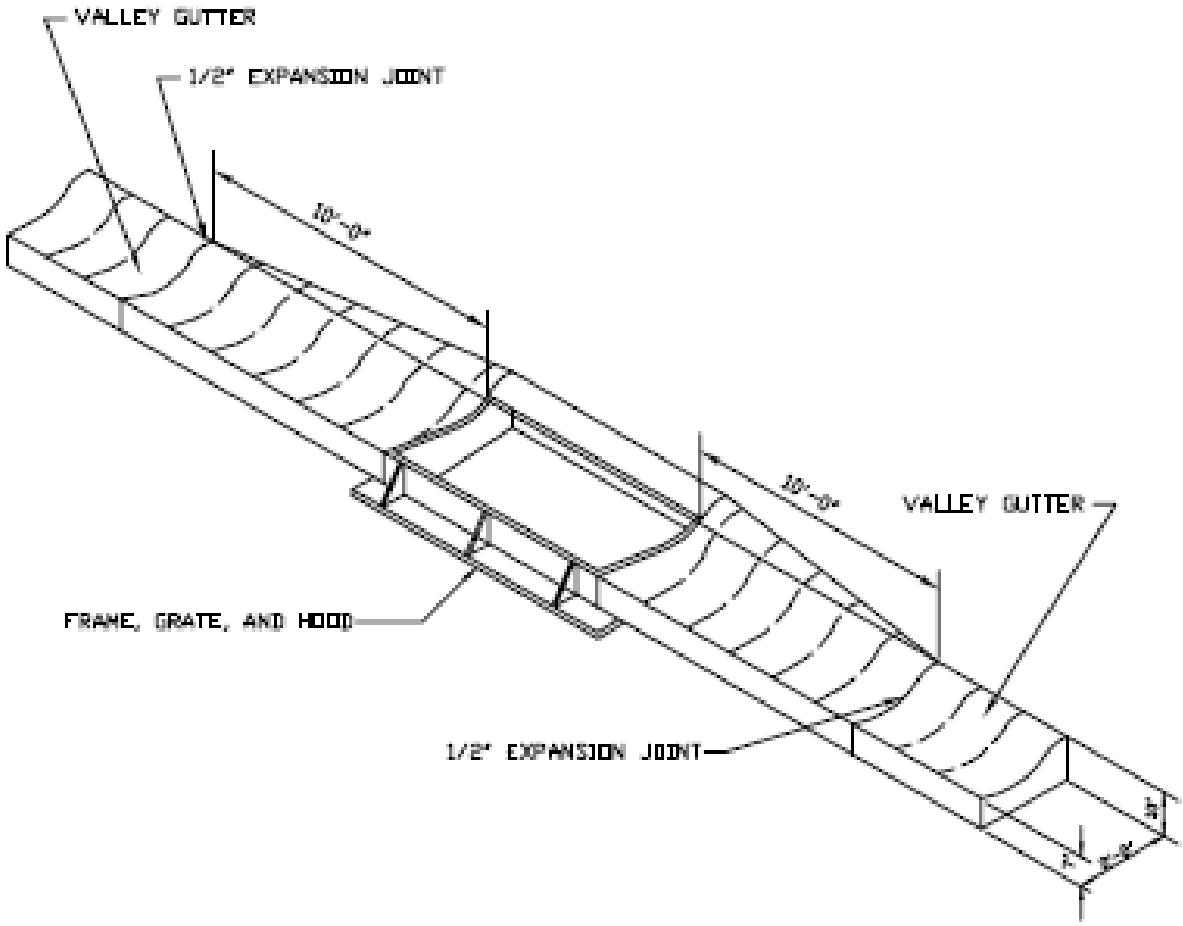

Maintain 10' transition section each side of catch basin.
Face of frame is to be in line with face of valley gutter and transition is to be to back of frame.

Troutman, NC Standard Detail	Date: April 2006
Storm Drainage	Scale: None
CATCH BASIN IN VALLEY GUTTER	Standard SD-2

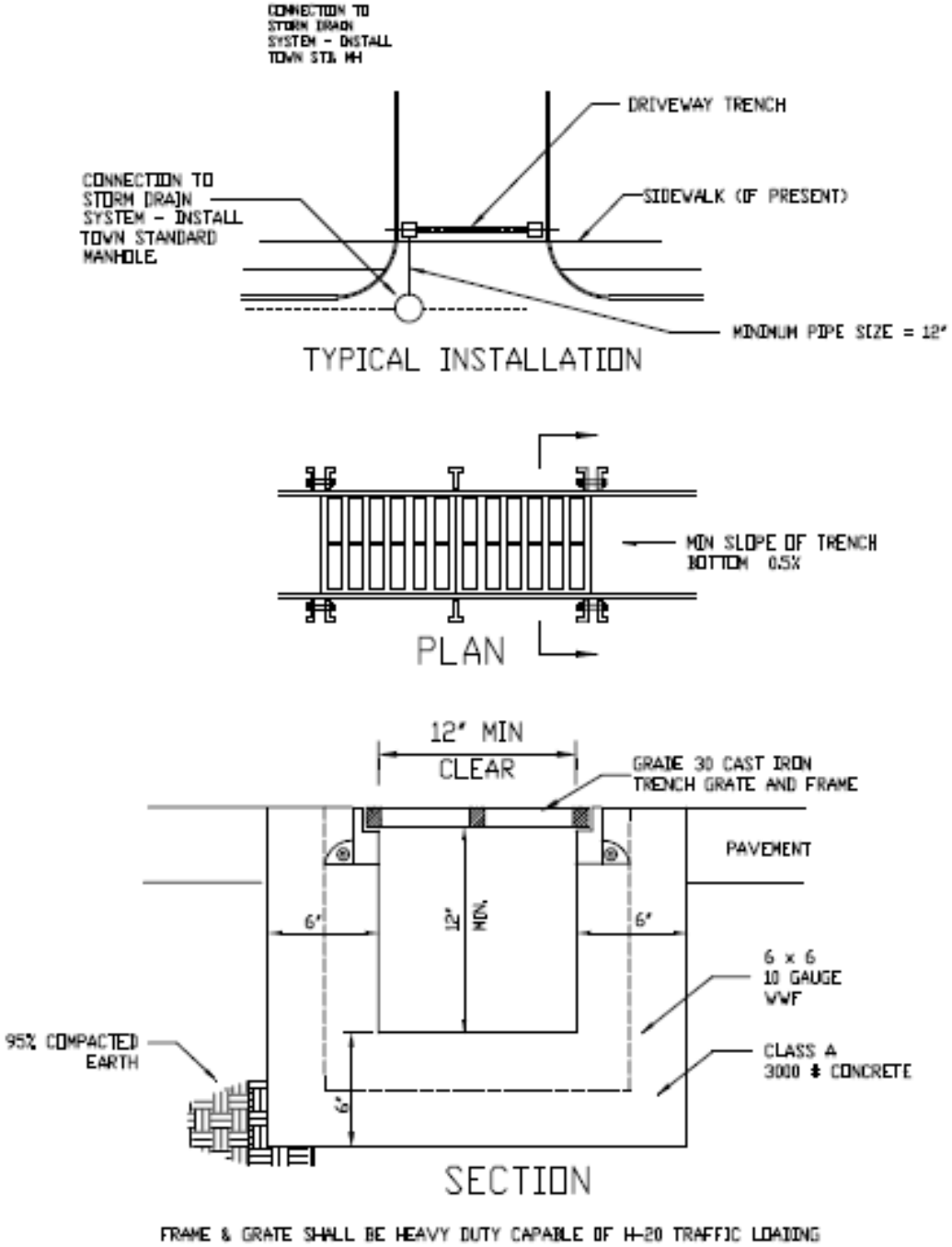

Troutman, NC Standard Detail	Date: April 2006
Storm Drainage **TRENCH DRAINS ACROSS DRIVEWAYS**	Scale: None Standard SD-3

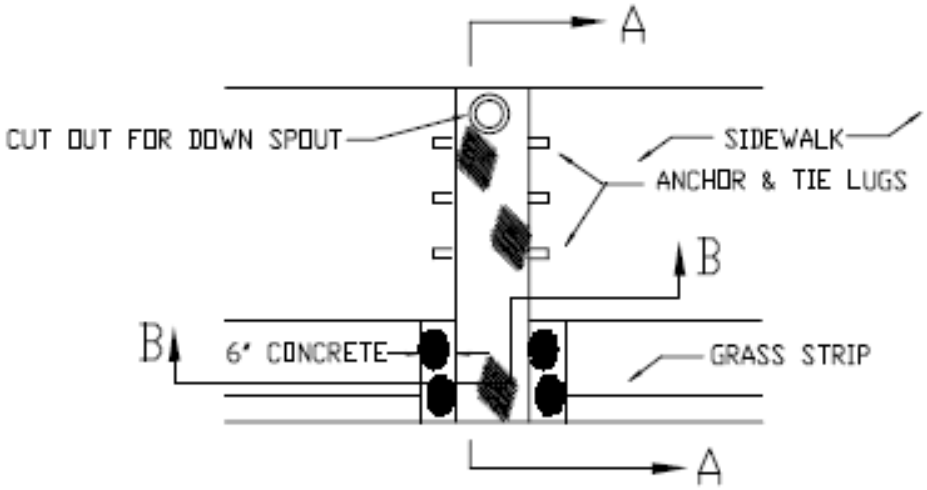

PLAN

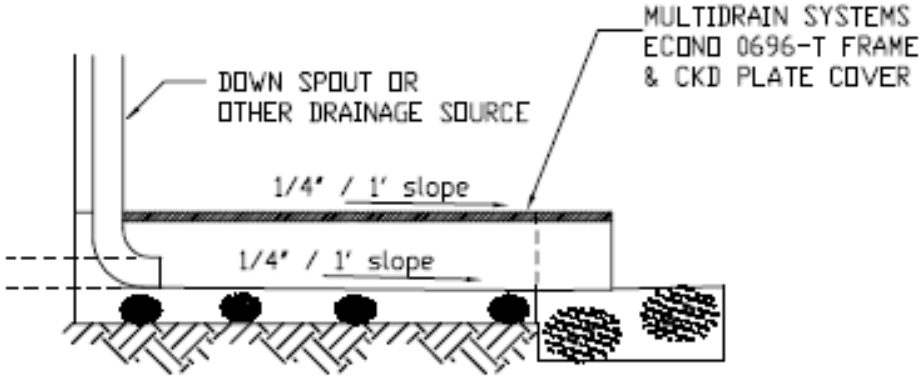

NOTE: NOT FOR USE WITH VALLEY GUTTER

SECTION A-A

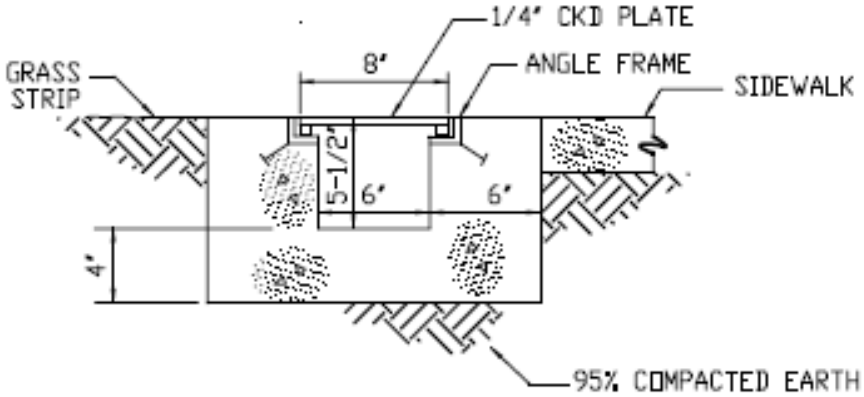

SECTION B-B

Troutman, NC Standard Detail	Date: April 2006
Storm Drainage	Scale: None
SIDEWALK FLUME	Standard SD-4

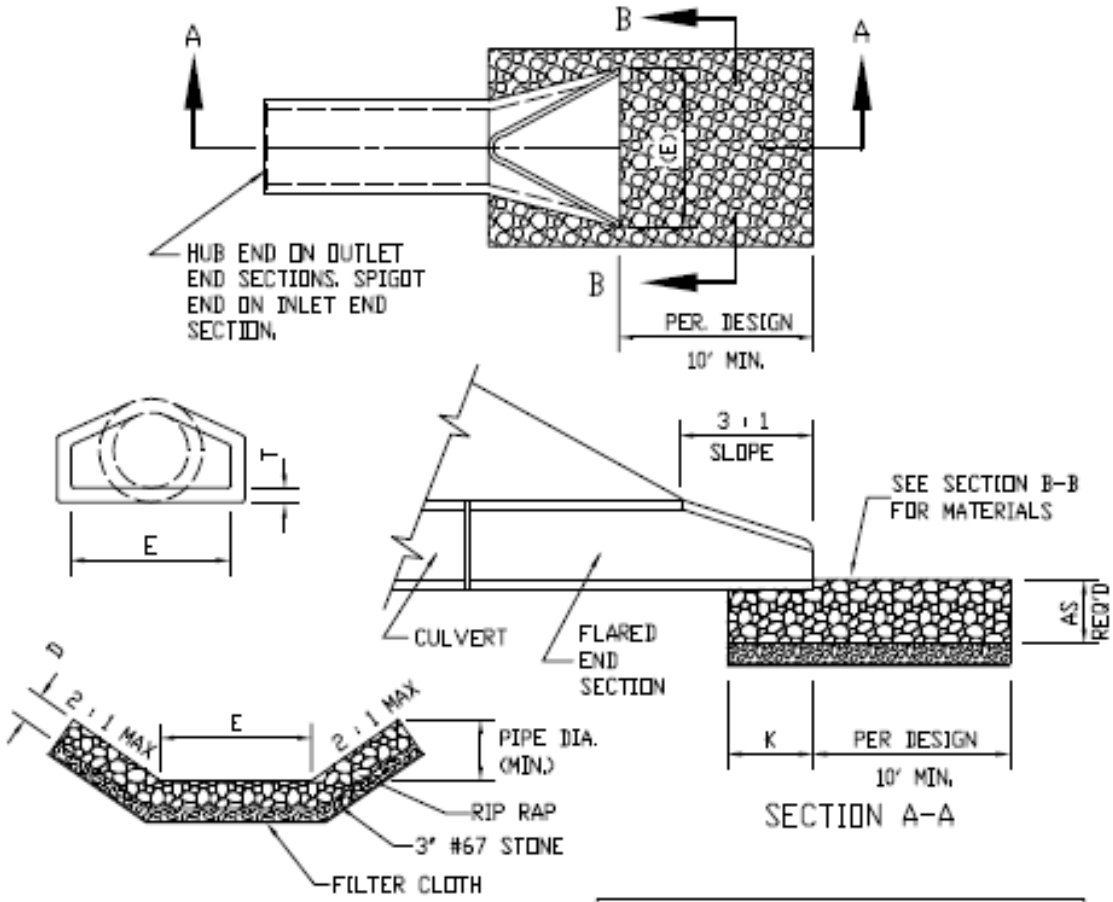

MINIMUM DEPTH D	
CLASS 1	2'
CLASS II	2'-6"
CLASS A	1'
CLASS B	2'

DIA	E	T	K
15"	2' 6"	2-1/4"	12"
18"	3' 0"	2-1/2"	12"
24"	4' 0"	3"	12"
30"	5' 0"	3-1/2"	12"
36"	6' 0"	4"	15"
42"	6' 6"	4-1/2"	18"
48"	7' 0"	5"	18"

1. Rip-Rap shall be NCDOT standard as described in the Town specifications.

2. Rip-Rap shall be sized and placed in accordance with the Town specifications.

3. Rip-Rap is not generally required at inlets except as slope protection.

4. Flared end sections are required on all culvert inlets and outlets where headwalls are not required.

5. On pipes larger than 48", the Town will review each location and determine the type inlet and outlet protection required.

Troutman, NC Standard Detail	Date: April 2006
Storm Drainage	Scale: None
FLARED END SECTION	Standard SD-5

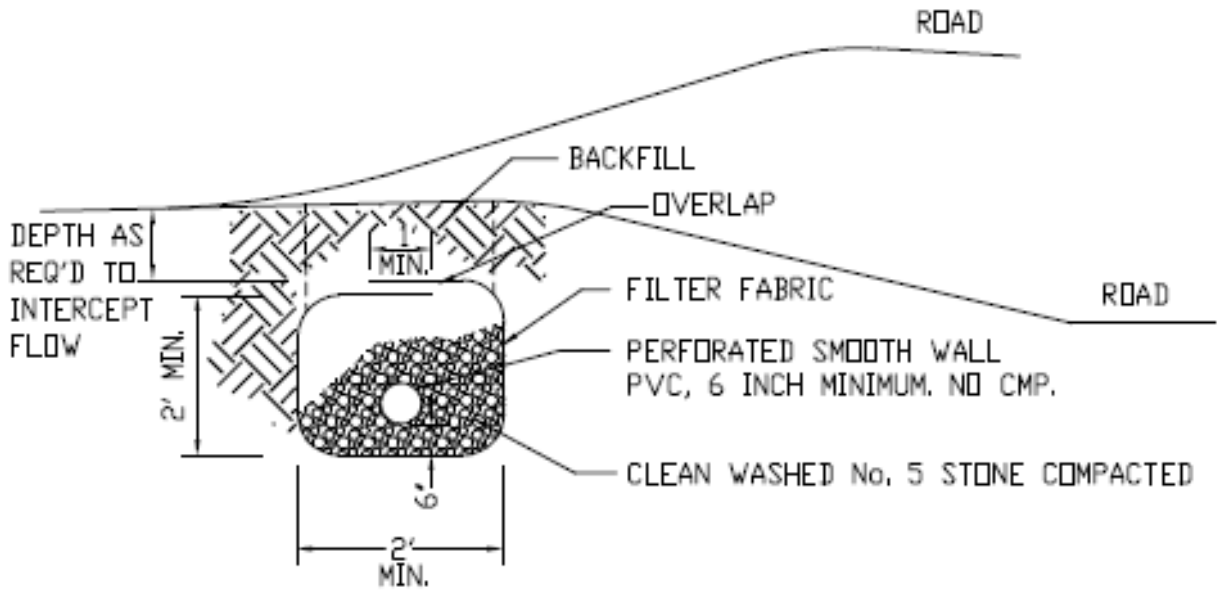

1. Engineer should ensure standard design is adequate for intended use.

2. Slope drain pipe at 1% toward discharge.

3. Filter fabric to be nonwoven type such as Mirafi 140N or approved equal (average values, tensile strength 120 lbs., puncture strength 70 lbs., burst strength 210 psi, coefficient of permeability, K=0.2 cm/sec, water flow rate 285 gal/min/sf.

4. Trench shall be clear of all roots, boulders and other obstacles. Voids in the trench wall shall be backfilled, so fabric conformity to the trench sides is ensured.

5. Overlaps between rolls shall have upstream roll overlap over the down stream roll by at least 2'.

6. Place aggregate in 12" lifts (maximum loose depth) and compact using plate compactors.

Troutman, NC Standard Detail	Date: April 2006
Storm Drainage **TYPICAL SUBSURFACE DRAIN**	Scale: None
	Standard SD-6

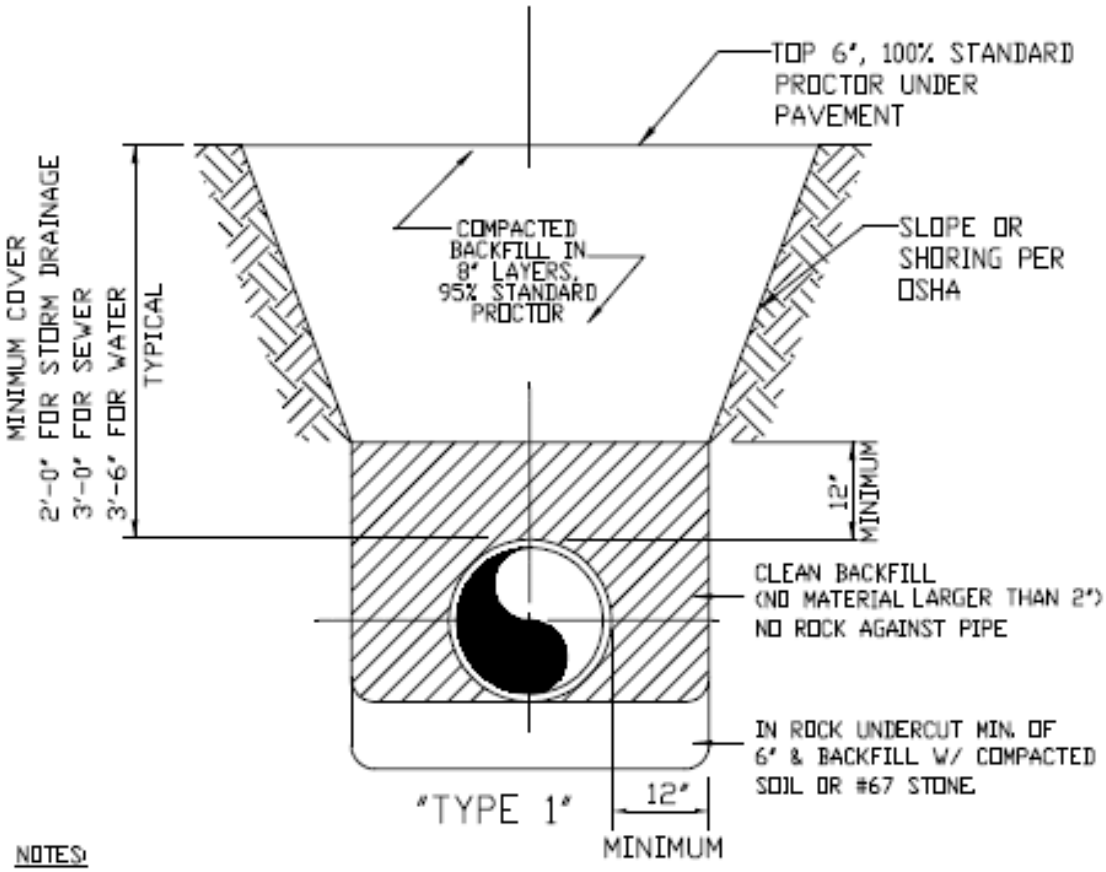

1. For use with all DIP, RCP, VCP & PVC pipe, except gravity sewers, unless conditions of poor or saturated soil or rock are present.

2. Excavate at pipe bells so bell does not support pipe.

3. Trench side slopes shall be in accordance with OSHA requirements. Support or shore as required. Begin side slope, if used, approximate 18" above top of pipe.

4. Backfill of trenches shall be accomplished immediately after the pipe is laid. Compaction requirements shall be attained by the use of mechanical tamps only. Each and ever layer of backfill shall be placed loose in 8" layers and thoroughly compacted into place.

5. Under no circumstances shall water be permitted to rise in unbackfilled trenches after the pipe has been placed.

6. All material under pavement shall have an in place density of 100% to a depth 6" below subgrade, and 95% at depths greater then 6".

Troutman, NC Standard Detail	Date: April 2006
Pipe Installation	Scale: None
TYPE I BEDDING	Standard P-1

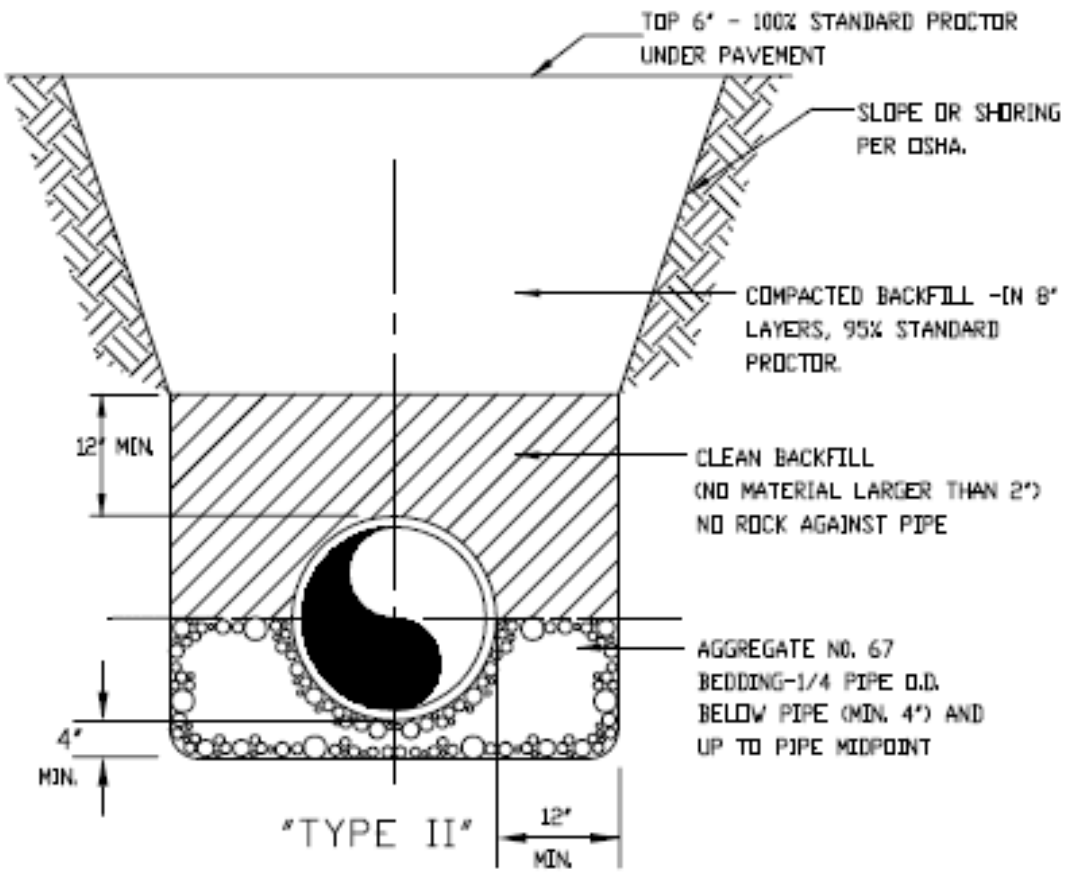

Notes:

1. For use with all sewer pipe, unless conditions of poor or saturated soil or rock are present.

2. Trench side slopes shall be in accordance with OSHA requirements. Support or shore as required. Begin side slope, if used, approximately 18" above top of pipe.

3. Backfilling of trenches shall be accomplished immediately after the pipe is laid. Compaction requirements shall be attained by the use of mechanical tamps only. Each and ever layer of backfill shall be placed loose in 8" layers and thoroughly compacted into place.

4. Under no circumstances shall water be permitted to rise in unbackfilled trenches after the pipe has been placed.

5. All material under pavement shall have an in place density of 100% to a depth 6" below subgrade, and 95% at depths greater then 6".

Troutman, NC Standard Detail	Date: April 2006
Pipe Installation	Scale: None
TYPE II BEDDING	Standard P-2

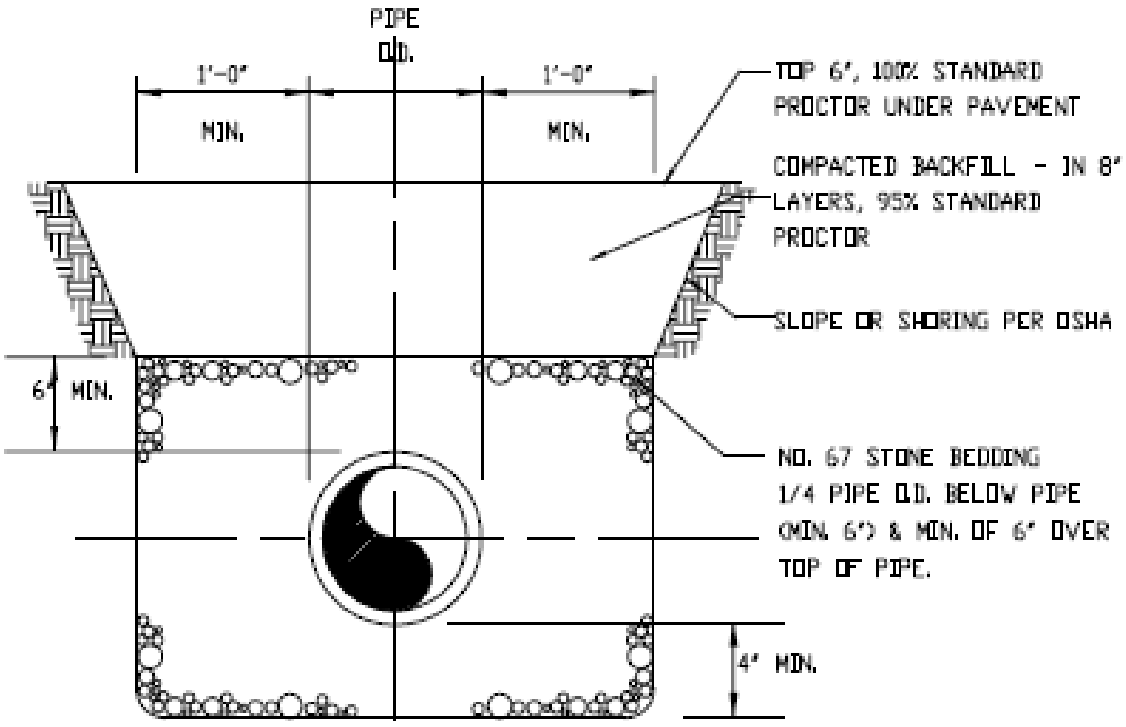

"TYPE III"

Notes:

1. For use with all gravity sewer pipe when conditions of poor or saturated soil or rock are present.

2. Trench side slopes shall be in accordance with OSHA requirements. Support or shore as required. Begin side slope, if used, approximately 18" above top of pipe.

3. Backfilling of trenches shall be accomplished immediately after the pipe is laid. Compaction requirements shall be attained by the use of mechanical tamps only. Each and ever layer of backfill shall be placed loose in 8" layers and thoroughly compacted into place.

4. Under no circumstances shall water be permitted to rise in unbackfilled trenches after the pipe has been placed.

5. All material under pavement shall have an in place density of 100% to a depth 6" below subgrade, and 95% at depths greater then 6".

Troutman, NC Standard Detail	Date: April 2006
Pipe Installation **TYPE III BEDDING**	Scale: None
	Standard P-3

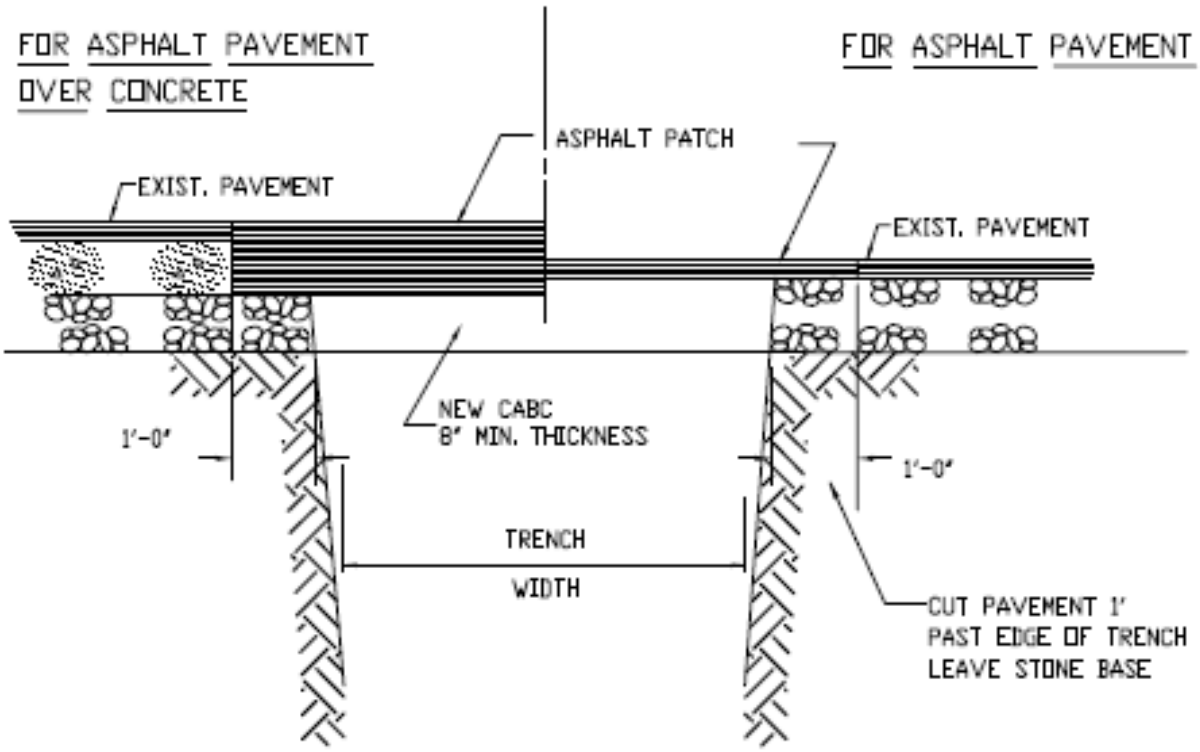

Notes:

1. Until asphalt patch has been installed stone base shall be placed flush with the existing surface for a minimum depth of 10".
2. Open cutting of State roads must be approved by NCDOT, and repairs must be made in accordance with NCDOT requirements.
3. Existing pavement shall be removed for a distance of 1' beyond both side of the trench opening.
4. Asphalt patch to be Type S 9.5B asphalt.

Troutman, NC Standard Detail	Date: April 2006
Pipe Installation **PAVEMENT REPAIR**	Scale: None
	Standard P-4

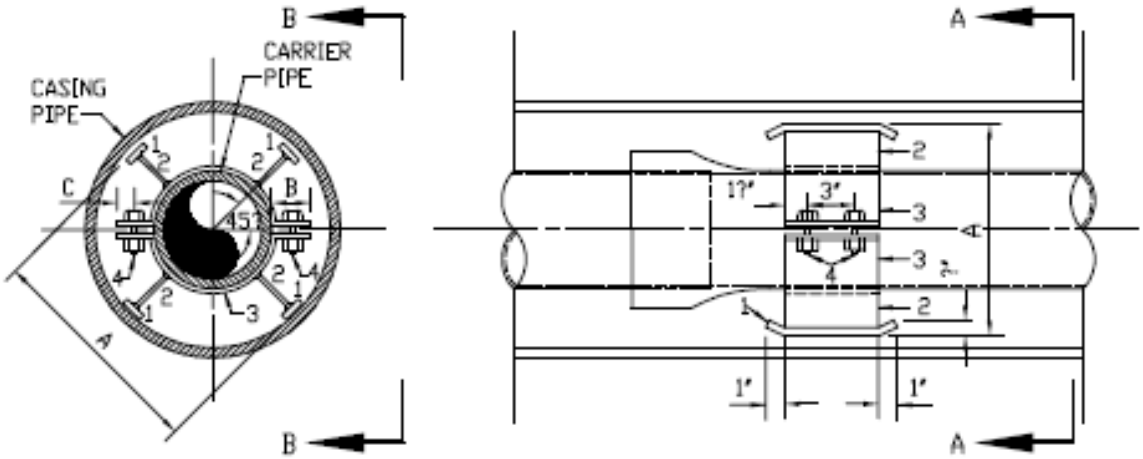

SECTION A-A

SECTION B-B

CARRIER PIPE		CASING PIPE			PIPE SUPPORT ASSEMBLY MARK NUMBERS				DIMENSIONS		
			HWY	R/R							
ID	OD	OD	WALL/TH	WALL/TH	1	2	3	4	A	B	C
4"	4.80"	12.75"	0.188"	0.250"	8" x 2" x 1/4"	6" x 2 1/2" x 1/4"	6" x 1/4"	3/8"ø	10.80"	1 3/4"	3/4"
6"	6.90"	12.75"	0.188"	0.250"	8" x 2" x 1/4"	6" x 1 1/2" x 1/4"	6" x 1/4"	3/8"ø	10.90"	1 3/4"	3/4"
8"	9.05"	16.00"	0.250"	0.281"	8" x 2" x 1/4"	6" x 2" x 1/4"	6" x 1/4"	3/8"ø	14.05"	1 3/4"	3/4"
10"	11.10"	18.00"	0.250"	0.312	8" x 2" x 1/4"	6" x 2" x 1/4"	6" x 1/4"	3/8"ø	16.10"	1 3/4"	3/4"
12"	13.20"	20.00"	0.250"	0.344"	8" x 2" x 1/4"	6" x 1 3/4" x 1/4"	6" x 1/4"	3/8"ø	17.70"	1 3/4"	3/4"
14"	15.30"	24.00"	0.250"	0.406	8" x 3" x 1/4"	6 x 2 3/4" x 1/4"	6" x 1/4"	3/8"ø	21.80"	2 1/4"	1 1/4"
16"	17.40"	30.00"	0.312"	0.500	8" x 3" x 3/8"	6" x 4 1/4" x 3/8"	6" x 3/8"	1/2"ø	27.40"	3"	1 3/8"
18"	19.50"	30.00"	0.312"	0.500	8" x 3" x 3/8"	6" x 3 1/4" x 3/8"	6" x 3/8"	1/2"ø	27.50"	3"	1 3/8"
20"	21.60"	30.00"	0.312"	0.500	8" x 3" x 3/8"	6" x 2 1/4" x 1/2"	6" x 3/8"	1/2"ø	27.60"	3"	1 3/8"
24"	25.80"	36.00"	0.375"	0.562	8" x 4" x 3/8"	6" x 2 3/4" x 1/2"	6" x 1/2"	1/2"ø	33.05"	3"	1 3/8"

NOTE: DIMENSIONS FOR SUPPORT ASSEMBLY MEMBERS AND CASING PIPE BASED ON MJ DI PIPE. PIPE WITH OTHER TYPES OF JOINTS MAY REQUIRE DIFFERENT SIZES.

Troutman, NC Standard Detail	Date: April 2006
Pipe Installation **STEEL ENCASED PIPE SUPPORT**	Scale: None
	Standard P-5